Polski Komitet Normalizacyjny

POPRAWKA do POLSKIEJ NORMY

ICS 29.240.20;

PN-EN 50341-3:2002/AC

Lipiec 2006

Wprowadza
EN 50341-3:2001/AC:2006, IDT

Zastępuje

Dotyczy
PN-EN 50341-3:2002 (U)

Elektroenergetyczne linie napowietrzne prądu przemiennego powyżej 45 kV -- Część 3: Zbiór normatywnych warunków krajowych

Na wniosek Komitetu Technicznego nr 80
ds. Ogólnych w Sieciach Elektroenergetycznych
poprawka do normy europejskiej EN 50341-3:2001/AC:2006 Overhead electrical lines exceeding AC 45 kV -- Part 3: Set of National Normative Aspects
ma status Poprawki do Polskiej Normy

© Copyright by PKN, Warszawa 2006

nr ref. PN-EN 50341-3:2002/AC:2006 (U)

Wszelkie prawa autorskie zastrzeżone. Żadna część niniejszej normy nie może być zwielokrotniana jakąkolwiek techniką bez pisemnej zgody Prezesa Polskiego Komitetu Normalizacyjnego

Corrigendum to EN 50341-3:2001

English version

This corrigendum relates to the following specific parts of EN 50341-3:

Part 3-1	Austria	Replacement of pages 10 and 42 Replacement of pages 57 and 58 (addition of Annex J)
Part 3-4	Germany	Full replacement
Part 3-7	Finland	Full replacement
Part 3-9	United Kingdom & Northern Ireland	Full replacement
Part 3-15	Netherlands	Replacement of pages 27, 28 and 33
Part 3-16	Norway	Full replacement
Part 3-18	Sweden	Full replacement
Part 3-19	Czech Republic	Full replacement

April 2006

EN 50341-3-1:2001/corrigendum April 2006

National Normative Aspects for Austria

Replace pages 10, 42, 57 and 58 by the following:

Clause National regulation

4.3 Actions, empirical approach

(ncpt) **AT.1** : The supports are to be designed to withstand the following external forces (loads):

(1) selfweight of support
(2) permanent loads
(3) additional loads
(4) assembly loads
(5) wind loads
(6) conductor pulls

4.3.2 Wind loads

(ncpt) **AT.1** : Wind loads on line supports are to be calculated for general under normal loading conditions, components exposed to wind are free of ice.

(ncpt) **AT.2** : In unusual cases, under particularly unfavourable climatic conditions, it may be necessary, in addition to the exceptional loading conditions as from relevant clauses of this regulations to allow for additional loading conditions, i.e. wind pressure on ice-covered components.

(ncpt) **AT.3** :

Table 4.3.2/AT.3 Wind pressure acting upon the directly affected components
Values relate to a wind velocity of 120 km/h and a thrust of 700 N/m^2

1.1.1.1.1.1.1 Component		aerodyn. drag coefficient C_x	C_x . q_{120} N/m2	Reduction factor
full flat surfaces		1,6	1112	1
flat lattice walls	made of angle profiles	1,4	973	1
	made of rods	1,1	765	1
Timber poles, steel poles, concrete poles of circular or near-circular shape		0,7	487	1
steel poles and concrete poles of hexagonal or octagonal shape		1,0	695	1
Double poles of Timber, steel resp. concrete	in the pole-plane	0,7	487	1
	rectangular to pole-plane where $e < d_m$ [1)]	0,8	556	1
wires and conductors of Circular or elliptical shape	d < 15,8 mm	1,15	600	0,75
	d > 15,8 mm	1,0	521	0,75
Aircraft warning and radar sphere d < 1,0 m		0,4	278	1

[1)] e ..... inner distance pole to pole
d_m ....means diameter of pole

(ncpt) **AT.4** : Wind loads acting upon supports resulting from conductors are to be calculated as from the formula $Q_{wc}=q_c \cdot G_c \cdot C_c \cdot d \cdot L \cdot \cos \phi$

(ncpt) **AT.5** : Plane surfaces and lattice construction in direction of wind may be neglected when calculating the wind load.

(ncpt) **AT.6** : In case of „quartering wind“ the total wind force acting on equilateral-triangular or quadratic steel lattice towers is to be taken as twice the wind force blowing vertically against one individual tower wall. Following that, back walls are considered as already taken into account in that calculation.

Clause National regulation

(ncpt) **AT.4** : Concrete foundations should be laid in one working process. In case of not reinforced foundations the link at the construction joint is to be assumed by using appropriate rated and distributed splice bars.

8.4 Loads acting on foundations

(ncpt) **AT1** : In the following the geotechnical design is based on characteristic values. This means that loads resulting from the tower design as well as the dead loads of the foundation itself and the dead load of the soil have to be considered with their characteristic values, which may be reduced by a factor 0,77 in case of loads from exceptional loadings.
If these characteristic values (E_k) are not calculated exactly, they may be approximately derived from the design values (E_d) from the tower design as follows:

$$E_k = E_d / 1{,}30$$

8.5.1 Geotechnical design, General

(A-dev) **AT.1** : A recognised or proven method of calculation must be used for the dimensioning of foundations.

8.5.2.a) Geotechnical design by calculation, General

(A-dev) **AT.1** : In addition the following applies:

(1) For the calculation of concrete foundations the specific weight of non-reinforced concrete may be assumed as 22 kN/m^3 maximum and that of reinforced concrete as 24 kN/m^3 maximum.

(2) The stability of a foundation is proven when it is shown to be able to withstand the multiples of the stresses encountered under normal and exceptional loading conditions as given in the following regulations on foundations.

(3) If a calculating method includes the proof of observance of the permitted angle of deviation the proof of stability also (e.g. Sulzberger), or the other way round, (e.g. maximum load method according to Bürklin), then in the first case it is not necessary to prove the stability and in the second case it is not necessary to prove the angle of deviation.

(A-dev) **AT.2** : The height of the stepping of non-reinforced concrete stepped foundations at the starting/connecting point must be at least 1,5 times the projection of this concrete stepped foundation. Deviations are permissible when it can be demonstrated that the permissible concrete stresses as given in the following will not be exceeded:
In non-reinforced concrete foundations, under normal loading conditions as per 4.3.10, the forces for compressive stress in concrete 1/4 W_{28} may however not exceed 500 N/cm^2, whilst the tensile stress in concrete 1/40 W_{28} may not exceed 40 N/cm^2. Where exceptional loading conditions as per 4.3.10 apply, the maximum value allowed for compressive stress 1/3 W_{28}, but maximum 650 N/cm^2, for tensile stresses 1/30 W_{28}, but maximum 50 N/cm^2. In this context W_{28} is understood to mean the concrete´s cubic strength after 28 days.

Clause National regulation

12 Quality assurance; Checks and taking-over

(A-dev) **AT.1** : Public Announcement of Taking into Service

The inhabitants of surrounding communities are to be informed of the taking into service of completed overhead high-tension power transmission lines in the manner usual for the locality. Attention is to be drawn to the dangers which could be associated with the existence and operating of this line (reference is also made to ÖVE-L5.)

Annex J (normative) **Lattice steel towers**

J.5.1.1 Flexural bucling

(ncpt) **AT.1**: The appropriate buckling curve for the respective type of profile shall be applied according to table J.5.1.1/AT.1:

Table J.5.1.1/AT.1 – Buckling curves for flexural and torsional-flexural buckling

	Flexural and torsional-flexural buckling Buckling curve according to ENV 1993-1-1
Hot rolled angle	b
Double hot rolled angle in cruciform cross section	b
Cold formed angle 90°	c
Cold formed angle 60°	c
Double hot rolled angle in parallel cross section	b
U-profile	c

In addition to the NNA given above, the following applies for Austria: Telecommunication lines carried on overhead transmission lines

(A-dev) **AT.1** : The complete following clause shall be considered as A-dev.

Under the preconditions given in chapter 1 telecommunication lines may be carried on supports of overhead lines. This regulations are also to be applied for telecommunication lines carried on OH-lines if they are not constructions of cables or conductors with integrated optical fibres not having the function of OPGWs or OPCONs.

Blank stranded conductors or aerial cables may be used for such telecommunication lines.

In the case of bare conductors the minimum cross-section permitted is 10 mm2.

The exceptional loading conditions for conductors or aerial cables are to be rated as per 4.3.3/AT.2.

The telecommunication line must correspond to the voltages which are to be expected through the electrical influence of the overhead high-voltage power transmission line.

Clause National regulation

In order to reduce the expected voltages it is recommended:
(1) the installation of discharge coils in the case of bare conductors,
(2) an earthed metal sheath or a static screen in the case of aerial cables.

The minimum clearance of bare telecommunication lines conductors or aerial cables from live conductors of the overhead high-voltage power transmission line is to be determined according to 5.4.3.
Apart from this, these clearances and also the clearance of bare telecommunication lines from one another must be adapted to the requirements of telecommunications technology.

For clearances from ground and from facilities, the requirements for Group 1 overhead lines in ÖVE-L11 apply.

Aerial cables must conform with the following conditions:
(1) The carrying parts are to be rated for the tensile stresses encountered.
(2) Aerial cables are to be fastened to the supports in such a manner that chaffing of the aerial cable against the supports even due to wind is avoided.
(3) The tension and suspension arrangements must comply with the relevant clauses for fittings
(4) Cable connections/joints in spans must comply with relevant clauses for fittings in a mechanical sense. The transfer of tensile stresses to the cable strands or the insulation is to be avoided. If necessary, the cable sleeves must permit a mechanically and electrically sound connection of the metallic cable sheath, the armouring, and the static screen.

Where telecommunication lines change over from an overhead high-voltage power transmission line support to a separate pole of telecommunication line, the following applies to the onward routing:
(1) the regulations for telecommunication lines: in cases where on leaving the overhead high-voltage power transmission line support, the telecommunication line is interrupted by protectors of a type permitted by the telecommunications authorities for this purpose;
(2) the regulations for overhead high-voltage power transmission lines carrying up to 1000 V apply: provided that the telecommunication cable is routed on without galvanic interruption. The common routing with other telecommunication lines in one telecommunication line is, however, not permitted.

Telephones, signalling apparatus, or other devices which can be connected to a telecommunication line carried on overhead high-voltage power transmission line supports without the intermediate switching of a protector (of a type approved by the telecommunications authorities for this purpose) must be so designed that in the event of violation of the telecommunication line by the high voltage neither persons nor property will be at risk.

National Normative Aspects (NNA)

for

GERMANY

based on EN 50341-1:2001

Version circulated with corrigendum April 2006.

In this document, the paragraphs modified/added by the corrigendum April 2006 are identified by a vertical line in the left margin of the text.

Contents

		Page
	Foreword	7
1	**Scope**	9
	DE.1 Field of application	
	DE.2 Application for plastic-covered conductors	
	DE.3 Application for conductors with components for telecommunication	
	DE.4 Application for installation of telecommunication equipment on supports	
	DE.5 Status of stipulations	
2	**Definitions, list of symbols and references**	9
2.1	Definitions	9
	DE.1 General	
	DE.2 Overhead line	
	DE.3 Towers and poles	
	DE.4 Foundations	
	DE.5 Conductors	
	DE.6 Insulators	
	DE.7 Accessories	
	DE.8 Layout of an overhead line	
2.2	List of symbols	14
2.3	Quoted standards and other documents	16
3	**Basis of design**	19
3.2.1	Basic requirements	
	DE.1 Basic requirements	
4	**Actions on lines**	19
4.3	Action, empirical approach	19
	DE.1 General	
4.3.1	Permanent loads	
	DE.1 Dead loads of towers or poles, insulator sets and other fixed equipment, of conductors	
4.3.2	Wind loads	
	DE.1 Basis	
	DE.2 Wind loads on conductors	
	DE.3 Wind loads on insulators	
	DE.4 Wind loads on lattice steel towers	
	DE.5 Wind loads on poles	
	DE.6 Quartering wind	
4.3.3	Ice loads	
	DE.1 Basis	
4.3.4	Combined wind and ice loads	
	DE.1 Wind on ice-covered conductors	
4.3.6	Construction and maintenance loads	
	DE.1 Construction loads	
4.3.7	Security loads	
	DE.1 Security loads	

4.3.8 Short-circuit loads
DE.1 Short-circuit loads
4.3.9 Other loads/extension of utilisation
DE.1 Extension of utilisation
DE.2 Aeolian vibrations
4.3.10 Loading cases
DE.1 Loading cases for towers or poles and foundations
DE.1.1 General
DE.1.2 Description of loading cases
4.3.11 Partial factors for action (loadings) and material for towers poles
DE.1 General
DE.2 Partial factors for tower bodies and crossarms
DE.3 Partial factors for structural materials

5 Electrical requirements 32
5.2.1 Current 32
DE.1 Conditions for verification of the maximum design temperature of conductors
5.3.5.3 Empirical method 32
DE.1 Compliance of condition "a_{som}"
5.4 Internal and external clearances 33
DE.1 General considerations for verification of clearances
DE.2 Application for systems with 16 2/3 Hz
5.4.2.2 Loading cases for the calculation of clearances
DE.1 Loading cases for the calculation of clearances
5.4.3 Clearances within the span and at the tower
DE.1 Reduction factor under design wind load conditions
DE.2 Method of approach to calculate the clearances within the span to be applied in case of equal cross-sections, materials and sags of conductors
DE.3 Method of approach to calculate internal clearances in the span in case of conductors with different cross-sections, material or sags
DE.4 Effect of the insulator set on the determination of clearances at supports
5.4.4 Minimum clearances to ground in areas remote from buildings, roads, railways and navigable waterways
5.4.5 Clearances to buildings, traffic routes, other lines and recreational areas

DE.1 Additional requirements for crossings
DE.1.1 General
DE.1.2 Attachment of conductors to multiple insulator sets
DE.1.3 Release clamps and rotating crossarms
DE.1.4 Sag in case of local additional load of spans
DE.1.5 Clearance in between conductors in case of local ice load
DE.1.6 Clearance between the conductors in case of failure of an insulator string
DE.2 Clearances to wind energy converters
5.4.5.2 Residential and other buildings
DE.1 Fire hindering roofs
5.4.5.3 Traffic routes
DE.1 Definition

5.4.5.4	Other power lines or overhead telecommunication lines	
	DE.1 Load cases to be considered for calculating clearances between crossing power lines	
5.6.1	Electric and magnetic fields under a line	39
	DE.1 Precaution values	
	DE.2 Technical recommendations	
6	**Earthing systems**	39
6.2.3.2	Current rating	39
	DE.1 Current decisive for the rating of the earthing system	
6.2.4.2	Measures to comply with permissible touch voltage	
	DE.1 Supplementary methods	
6.4	Earthing measures against lightning effects	41
	DE.1 Avoiding of back-flashovers	
6.6	Site inspection and documentation of earthing systems	41
	DE.1 Indication for inspection of earthing systems	
7	**Supports**	41
7.1	Initial design considerations	41
	DE.1 Loads and loading conditions	
	DE.2 Tower outline and geometry	
7.2	Materials	42
	DE.1 Material of steel components	
	DE.2 Material of bolts	
7.3	Lattice steel towers	42
7.3.1	General	
	DE.1 Minimum dimension of components	
7.3.5.2.1	Global analysis	
	DE.1 Determination of member forces	
	DE.2.1 Eccentricity of member connections	
7.3.6.2	Connection with bolts	
	DE.1 Securing of bolted connections	
	DE.2 Punching of holes for rivets and bolts	
	DE.3 Dimensions of connecting elements in joints	
7.3.6.2.1	Positioning of boreholes	
	DE.1 Edge and borehole distances	
7.4	Steel poles	44
7.4.1	General	
	DE.1 Limit of specifications	
7.4.4	Serviceability limit states	
	DE.1 Limitation of deflection	
7.4.5.2	Calculation of internal forces and moments	
	DE.1 Theory of calculation	
7.4.5.4	Resistance of cross-sections	
	DE.1 Stability against local buckling	
	DE.2 Cut outs	
7.4.6.3	Slip joint connections	
	DE.1 Additional requirements	
7.6	Concrete poles	45
	DE.1 Load assumptions	
	DE.2 Design and rating	

7.7	Guyed structures	46
	DE.1 Limitation of use	
	DE.2 Stays for towers	
7.8	Other structures	46
	DE.1 Minimum requirements and approval	
7.9	Corrosion protection and finishes	46
	DE.1 Selection of the protection system	
7.10	Maintenance equipment	46
	DE.1 Walkways for climbing and access	
8	**Foundations**	48
8.2	General requirements	48
	DE.1 General requirements	
8.4	Loads acting on the foundations	48
	DE.1 Basis of design	
8.5.2	Geotechnical design by calculation	48
	DE.1 Soil characteristics	
	Compact foundations	
	DE.2 Monoblock foundations	
	DE.2.1 Assumptions for design	
	DE.2.2 Stability conditions	
	DE.3 Slab foundations	
	DE.3.1 Assumptions for design	
	DE.3.2 Stability conditions	
	DE.4 Grillage-type slab foundations	
	DE.5 Single-pile foundations	
	DE.6 Separate stepped block foundations	
	DE.6.1 Assumptions for design	
	DE.6.2 Stability conditions in case of loading by compression	
	DE.6.3 Stability conditions in case of loading by uplift	
	DE.6.4 Additional conditions	
	DE.7 Auger-bored and excavated foundations	
	DE.7.1 Assumptions for design	
	DE.7.2 Stability conditions in case of loading by compression	
	DE.7.3 Stability conditions in case of loading by uplift	
	DE.7.4 Additional conditions	
	DE.8 Separate grillage foundations	
	DE.9 Pile foundations	
8.6	Loading tests	59
	DE.1 Proof tests	
8.7	Structural design	59
	DE.1 Structural design	
	DE.2 Concrete foundations	
	DE.2.1 Rating	
	DE.2.2 Embedment of steel members into the concrete by means of anchoring elements	
	DE.2.3 Embedment of steel structures in concrete by adhesion	
	DE.3 Pile foundations	

9	**Conductors**	60
	DE.1 Dimensions and materials	
	DE.2 Mechanical characteristics	
	DE.3 Thermal rating	
	DE.4 Loading to long-term tensile stress	
	DE.5 Loading according to everyday stress	
	DE.6 Loading according to ultimate stress	
	DE.7 Stress due to aeolian vibration	
	DE.8 Maximum sag	
	DE.9 Provisions to take into account the conductor creep	
10	**Insulators**	65
10.7	Mechanical requirements	65
	DE.1 Mechanical rating	
	DE.2 Line post insulators	
	DE.3 Multiple insulator sets	
10.9	Material selection and specification	66
	DE.1 Materials and design	
11	**Conductor accessories – overhead line fittings**	66
11.2	Electrical rating	66
	DE.1 Conductor accessories	
	DE.2 Accessories for insulator sets	
11.6	Mechanical rating	67
	DE.1 Mechanical requirements	
	DE.2 Protective fittings	
	DE.3 Attachment of conductors at insulator sets and line post insulators	
	DE.4 Conductor joints	
	DE.5 Accessories for insulators sets	
	DE.6 Materials, design and testing	
	DE.7 Turnbuckles	
12	**Quality assurance, checks and taking-over**	69
Annex J	**Lattice steel towers**	70
J.3.2	Net cross-sectional area	
J.3.2(2)	DE.1 Determination of net cross-section	
J.4.1	Tensile force	
	DE.1 Rating of members under tensile forces	
J.5.1	Compression members	
	DE.1 Rating of members under compression forces	
	Buckling length of members	
J.6.2	Leg members and chords	
	DE.1 Buckling length and slenderness ratio of leg members	
J.6.3.2	Single lattice	
	DE.1 Reference	
J.6.3.3	Cross bracing	
	DE.1 “Boxed values” used in the λ formulae	
J.6.3.4	Cross bracing with redundant members	
	DE.1 Cross bracing members	

Foreword

1 The German National Committee (NC) is identified by the following address:

Deutsche Elektrotechnische Kommission im DIN und VDE (DKE)
Stresemannallee 15 (VDE Haus)
D-60596 Frankfurt/Main
Germany
phone ++49 69 6308-(0) 224
Fax ++49 69 6312-925

Name of the relevant technical body:
Komitee 421 (K 421) "Freileitungen" (Overhead power lines)

2 The German NC and its technical body K 421 “Overhead power lines” of Deutsche Elektrotechnische Kommission im DIN und VDE (DKE) prepared this Part 3-4 of EN 50341, listing the German National Normative Aspects under its sole responsibility, and duly passed it through the CENELEC and CLC/TC 11 procedures.

NOTE The German NC also takes sole responsibility for the technically correct co-ordination of this EN 50134--3-4 with EN 50341-1.

3 This EN 50341-3-4 is normative in Germany and informative in other countries.

4 This Part 3-4 has to be read in conjunction with EN 50341-1, hereafter referred to as Part 1. The numbering of clauses used in this Part 3-4 corresponds to that of Part 1. Specific subclauses, which are prefixed by "DE", are to be read as amendments to the relevant text in Part 1. Any necessary clarification regarding the application of Part 3-4 in context with Part 1 shall be referred to the German NC who will, in co-operation with CLC/TC 11 clarify the inquiries.

Where no specifications are stipulated in Part 3-4, Part 1 applies.

5 In case of "boxed values" defined in Part 1, amended values, if any, which are defined in Part 3-4 shall be taken into account in Germany.

However, any „boxed value“, whether in Part 1 or Part 3-4, shall not be amended in the direction of greater risk in a Project Specification.

6 The German NC declares in accordance with 3.1 of Part 1 that this Part 3-4 follows the "Empirical approach" (4.3), and that consequently 4.2 "General Approach" is not applicable for Germany.

7 The National German standards and regulations quoted in Part 3-4 are listed in 2.3/DE.1 of this Part 3-4.

NOTE All national standards referred to in this Part 3-4 will be replaced by the relevant European Standards as soon as they become available and are declared by the German NC to be applicable and thus reported to the secretary of CLC/TC 11.

8 In this EN 50341-3-4 all clauses, which are prefixed "DE" are related to "national complements" (ncpt), but the following:
- 4.3.2/DE.2 is "snc",
- 4.3.3/DE.1 is "snc",
- 9.2.4/DE.4 is "snc",
- 5.4.2.2/DE.1 is "snc",
- 5.6.1/DE.1 is "A-dev".

The definitions for "ncpt", "snc" and "A-dev" are given in Part 1 of this EN.

Clause National regulation

1 Scope

1 (ncpt) **DE.1 Field of application**
(supplement to, note 1 of Part 1)
This EN applies to planning and design of new overhead lines with nominal voltages exceeding AC 45 kV.

This standard needs not to be adopted for existing installations. Installations in the planning or erection stage may be completed adopting the standard valid at the beginning of planning.

1 (ncpt) **DE.2 Application for plastic-covered conductors**
(supplement to note 2 of Part 1)
This standard is applicable also for plastic-covered conductors in Germany.

1 (ncpt) **DE.3 Application for conductors with components for telecommunication**
(supplement to note 3 of Part 1)
In Germany this standard is applicable for all types of conductors which contain telecommunication components.

1 (ncpt) **DE.4 Application for installation of telecommunication equipment on supports**
(supplement to note 3 of Part 1)
This standard is applicable for the installation of telecommunication equipment on supports in Germany. Reference is made to 4.3.9/DE.1.

1 (ncpt) **DE.5 Status of stipulations**
The stipulations in DE.1 to DE.4 listed above are normative.

2 Definitions, list of symbols and references

2.1 **Definitions**

2.1 (ncpt) **DE.1 General**
The terms and definitions which are given in Part 1 are supplemented and detailed as follows.
The terms following hereafter are all normative for all stipulations in the DE-NNA.

2.1 (ncpt) **DE.2**
overhead line
includes the entire installation for transmission and distribution of electrical power above ground, consisting of supports and line components. Supports comprise towers or poles, their foundations and earthing. Line components comprise overhead conductors and insulators together with their accessories.

2.1 (ncpt) **DE.3**
towers and poles
parts of the supports. They include the tower body, earthwire peak(s) and crossarms(s). According to 4.3.10/DE.1 they serve for following purposes:

Clause National regulation

DE.3.1
suspension tower
supports the conductors in a straight line

DE.3.2
angle suspension tower
serves as suspension support for the conductors where the line changes direction

DE.3.3
angle tower
carries the resulting conductor horizontal tensile forces where the line changes direction

DE.3.4
section tower and **angle section tower**
carry the conductor tensile forces in line direction or in the resultant direction, respectively, and serve additionally as rigid points in the line

DE.3.5
dead end tower
carries the total conductor tensile forces on one side

DE.3.6
special tower
serves for one or several of the above mentioned purposes

DE.3.7
guyed tower
is additionally provided with staywires in order to stabilise the tower body

DE.3.8
uplift or downward forces
are generated by the components of the conductor tensile forces due to differing heights of the attachment points. They act against or in direction of the conductor dead weight forces, respectively

DE.3.9
span length
the horizontal distance between two adjacent supports. When determining the horizontal distance of the attachment points of a conductor the angle of the crossarm to the line must be considered accordingly

DE.3.10
wind span of a tower or pole
the arithmetic mean value of the lengths of adjacent spans

DE.3.11
weight span of a tower or pole
the horizontal distance between lowest points of a conductor on either side of a support

Clause National regulation

DE.3.12
tower equipment
summarizes all components which are not part of the tower structure or of the conductors. Insulators and accessories are in this category as well as radar markers and warning spheres when they are fitted directly at the tower or pole

2.1 (ncpt) **DE.4**
foundations
parts of the supports and fulfil the task of transferring the structural loads from the tower to the subsoil, and, at the same time, protecting the tower against critical movements of the subsoil

DE.4.1
compact foundation
accommodates the tower body within one single foundation

DE.4.2
separate footing foundation
provides individual foundations for each leg member of the tower

DE.4.3
working load of a foundation
the load transferred from the tower to the foundation for a given loading case

DE.4.4
failing load of a foundation
the load under which the foundation fails. The failure is defined by inadmissible large foundation movements and occurs in the transition range between stable and unstable state of equilibrium

2.1 (ncpt) **DE.5**
conductors
the bare or covered, insulated or earthed cables strung between the supports of an overhead line irrespective of whether they are alive or not

DE.5.1
bundle conductor
an arrangement of two or more sub-conductors used instead of a single conductor and kept at approximately constant spacing over their entire length

DE.5.2
failing load of a conductor
0,95 times the rated tensile strength according to relevant standards

DE.5.3
nominal cross-section of a conductor
the cross-sectional parameter used for the designation of the conductor

DE.5.4
actual cross-section of a conductor
the cross-section of metal resulting from the conductor design without considering tolerances due to manufacturing

Clause National regulation

DE.5.5
tensile stress of a conductor
the theoretical value which results from the division of the conductor tensile force by the actual cross-section

DE.5.7
failing stress of a conductor
the value which is obtained by division of the conductor failing load by the nominal cross section

DE.5.8
everyday stress
the horizontal component of the conductor tensile stress which occurs at the annual mean temperature (normally + 10°C) without wind load

DE.5.9
conductor temperature
the temperature of a conductor due to ambient temperature, wind, solar radiation and electrical load current

DE.5.10
sag of a conductor
the vertical distance between the conductor and the alignment of the conductor suspension points (suspension sets) or attachment points (tension sets) at the supports

DE.5.11
maximum sag of a conductor
the greater of the values resulting from
- conductor temperature of –5 °C with ice load according to 4.3.3/DE.1 or
- from maximum design temperature of the conductor without ice load.

2.1 (ncpt) **DE.6**
insulators
serve as insulation of live conductors against earth or other live components. The definitions for insulators are given in DIN EN 60383-1 and DIN VDE 0441-2 (VDE 0441 Teil 2)

DE.6.1
multiple insulator set
an arrangement of several insulator strings in parallel

2.1 (ncpt) **DE.7**
accessories
serve for the mechanical attachment, the electrical connection and the protection of conductors and insulators. The definitions for fittings, accessories for conductors and accessories for insulator sets and for other conductor attachments are laid down in EN 61284

Clause National regulation

DE.7.1
accessories for conductors
components which are directly connected to the conductor and serve to terminate, to suspend and to joint the conductors. Vibration protection fittings and bundle spacers are also in this category

DE.7.2
accessories for insulator sets and other conductor attachments
components which serve to connect the tension or suspension components (accessories for conductors) with the supports. In case of insulator sets the components to connect insulators are also in this category. The insulators, however, are excluded

Usually, these are all components mechanically loaded by the conductor tensile force or the conductor dead weight and arranged between the assembly of the tension or suspension clamp and the first detachable part at the support, for example the jointing pin or the U-bolt, the insulators excepted. Arcing and corona protection fittings are also included.

2.1 (ncpt) **DE.8 Layout of an overhead line**

DE.8.1
line section
the part of an overhead line situated between two adjacent section supports

DE.8.2
span
the part of an overhead line situated between two adjacent supports

DE.8.3
crossing span
the part of an overhead line over or under a crossed installation situated between two adjacent supports

DE.8.4
clearances
according to Clause 5 of Part 1 and of Part 3-4 are minimum clearances and shall not be infringed under conditions of maximum sag at the selected conductor temperature according to 9.2.4/DE4.1.

2.2 List of symbols

Symbol	Signification		Reference to clause
A	area of foundation subface	m^2	8.5.2/DE.3.2
A	gross area	mm^2	Annex J.3.2
A_{ins}	insulator area exposed to wind	m^2	4.3.2/DE.3
A_{net}	Net cross-sectional area	mm^2	J.3.2
A_{pol}	projected area of pole	m^2	4.3.2/DE.5
A_{T1}, A_{T2}	area of tower face 1 and 2 filled with sections	m^2	4.3.2/DE.4
A_{TQ}	area of crossarm face filled with sections	m^2	4.3.2/DE.4

Clause National regulation

Symbol	Signification		Reference to clause
a_{so}	smallest distance between live and earthed parts at a support	m	5.4/DE.1
a_{som}	maximum discharge gap of insulator sets	m	5.3.5.3/DE.1
b	width of foundation	m	8.5.2/DE.6.1
b_x, b_y	lateral dimensions of a concrete foundation	m	8.5.2/DE.3.2
c	minimum clearance between phases or to earth wires	m	5.4.3/DE.2
C_{xc}	drag factor for conductors	-	4.3.2/DE.2; 5.4.3/DE.4
C_{xpol}	drag factor of pole	-	4.3.2/DE.5
C_{xQ}	drag factor of a crossarm	-	4.3.2/DE.4
C_{xT1}, C_{xT2}	drag factor of face 1 and 2	-	4.3.2/DE.4
d	conductor diameter without ice load	m	4.3.2/DE.2
D_{el}	minimum electrical clearance phase to earth	m	5.4/DE.1; 5.4.3/DE.2
D_I	diameter of ice covered conductor	m	4.3.4/DE.1
D_{pp}	minimum electrical clearance phase to phase	m	5.4/DE.1; 4.3/DE.2
e	eccentricity	m	8.5.2/DE.3.2
E_d	design value of loading	kN	8.4/DE.1; 4.3.11/DE.2
E_k	characteristic value of loading	kN	8.4/DE.1; 4.3.11/DE.2
e_x, e_y	eccentricity of the vertical load in the foundation subface	m	8.5.2/DE.3.2
f	conductor sag	m	5.4.3/DE.2
G	dead weight of foundation	kN	8.5.2/DE.1
G_K	dead weight of conductor	N	4.3.11/DE.2
g_T	design ice load	N/m	4.3.3/DE.1
G_{xc}	conductor response coefficient	-	4.3.2/DE.2
H	altitude above O.D.	m	4.3.2/DE.1
h	height above ground level	m	4.3.2/DE.1
I''_{K1}	initial symmetrical short-circuit current	A	6.2.2.3/DE.1
I''_{kEE}	double earthfault current	A	6.2.2.3/DE.1
I_c	capacitive earth fault current	A	6.2.2.3/DE.1
I_{RES}	earthfault residual current	A	6.2.2.3/DE.1
I_{St}	peak value of the lightning current	A	6.4/DE.1
i_{vv}, i_{yy}	radius of gyration	m	Annex J.6.2/DE.1
k	coefficient for conductor swing	-	5.4.3/DE.2
K_1	reduction factor for electric clearances	-	5.4/DE.1; 5.4.3/DE.1
L	member length	m	Annex J.6.2/DE.1
L	span length	m	4.3.4/DE.1
l_K	length of swinging part of insulator set	m	5.4.3/DE.2
p	soil pressure	N/m^2	8.5.2/DE.3.2
q	wind pressure	N/m^2	4.3.2/DE.1
q_c	wind pressure on conductors	N/m^2	5.4.3/DE.4
Q_{CK}	loads due conductor tensile forces	N	4.3.11/DE.2
Q_{IK}	ice load	N	4.3.11/DE.2

Clause National regulation

Symbol	Signification		Reference to clause
q_o	reference wind pressure at ground level	N/m^2	4.3.2/DE.1
Q_{PK}	construction loading	N	4.3.11/DE.2
Q_{Wcx}	wind load on conductor in direction of the crossarm axis	N	4.3.2/DE.2
Q_{Wcx}	wind load on conductors	N	4.3.2/DE.2
Q_{Wcy}	wind load on conductor perpendicularly to the crossarm axis	N	4.3.2/DE.2
Q_{WK}	wind load	N	4.3.11/DE.2
Q_{Wpol}	wind load on poles	N	4.3.2/DE.5
Q_{WTQx}	wind load on crossarm in parallel to the crossarm axis	kN	4.3.2/DE.4
Q_{WTQy}	wind load on crossarm perpendicularly to the crossarm axis	kN	4.3.2/DE.4
Q_{WTx}	wind load on tower body in parallel to the crossarm axis	KN	4.3.2/DE.4
Q_{WTy}	wind load on tower body perpendicularly to the crossarm axis	kN	4.3.2/DE.4
r	earthwire reduction factor	-	6.3.2.3/DE.1
r	radius of circular foundation subface	m	8.5.2/DE.3.2
R_{St}	impulse earth resistance of a tower	□	6.4/DE.1
t	depth of foundation	m	8.5.2/DE.6.1
U_{St}	lightning impulse withstand voltage	V	6.4/DE.1
Z	vertical component of uplift force	kN	8.5.2/DE.6.4
ΔA	sum of hole areas	mm^2	J.3.2
$ß$, $ß_0$	angle of earth frustum	degree	8.5.2/DE.6.1
ϕ	angle between wind direction and crossarm axis	degree	4.3.2/DE.2
γ_c	partial factor for conductor tensile forces	-	4.3.11/DE.2
γ_G	partial factor for dead weights	-	4.3.11/DE.2
γ_I	partial factor for ice load	-	4.3.11/DE.2
γ_P	partial factor for construction loads	-	4.3.11/DE.2
γ_W	partial factor for wind load	-	4.3.11/DE.2
λ	slenderness ratio	-	Annex J.6.2/DE.1
$\theta_{1,2}$	angle of line direction	degree	4.3.2/DE.2
ρ_I	unit ice weight force	N/m^3	4.3.3/DE.1; 4.3.4/DE.1
κ	coefficient for permissible soil pressure	-	8.5.2/DE.1
ϑ	angle of wind attack	degree	4.3.2/DE.2

Clause National regulation

2.3 Quoted standards and other documents

Reference is made to the following standards quoted in German NNA:

DIN 1045-1:2001-07
Tragwerke aus Beton, Sahlbeteon und Spannbeton – Teil 1:Bemessung und Konstrution
Concrete, reinforced and prestressed concrete structures – Part 1: Design

DIN 1054:2003-01
Baugrund – *Sicherheitsnachweise im Erd- und Grundbau*
Soil – V*erification of the safety of earthworks and foundations*

DIN 1681:1985-06
Stahlguß für allgemeine Verwendungszwecke – Technische Lieferbedingungen
Cast steels for general engineering purposes – Technical delivery conditions

DIN 3051-4:1972-03
Drahtseile aus Stahldrähten - Grundlagen, Technische Lieferbedingungen
Steel Wire Ropes - Characteristics, Technical Conditions of Delivery

DIN 4102-7:1998-07
Brandverhalten von Baustoffen und Bauteilen – Teil 7: Bedachungen - Begriffe, Anforderungen und Prüfungen
Fire behaviour of building materials and building components – Part 7: Roofing - Definitions, requirements and testing

DIN 4228:1989-02
Werkmäßig hergestellte Betonmaste
Precast concrete lattice towers, masts and columns

DIN 17666:1983-12
Niedriglegierte Kupfer-Knetlegierungen - Zusammensetzung
Low alloy wrought copper alloys - Composition

DIN 18800-7:2002-09
Stahlbauten – Teil 7: Ausführung und und Herstellerqualidfikation
Steel structures – Part 7: Execution and constructor's qualification

DIN 48201-1:1981-04
Leitungsseile - Seile aus Kupfer
Copper stranded conductors

DIN 48201-2:1981-04
Leitungsseile - Seile aus Kupfer-Knetlegierungen (Bz)
Bronze stranded conductors

DIN 48201-3:1984-04
Leitungsseile - Seile aus Stahl
Steel stranded conductors

DIN 48204:1984-04
Leitungsseile - Aluminium-Stahl-Seile
Steel reinforced aluminium stranded conductors

Clause National regulation

DIN 48206:1984-04
Leitungsseile - E-AlMgSi-Stahl-Seile
Aluminium-aloy conductors - Steel reinforced

DIN 48334:1977-07
Spannschlösser, geschlossene Form
Turnbuckles for overhead power lines

DIN EN 573-3:1994-12
Aluminium und Aluminiumlegierungen - Chemische Zusammensetzung und Form von Halbzeug – Teil 3: Chemische Zusammensetzung; Deutsche Fassung EN 573-3:1994
Aluminium and aluminium alloys - Chemical composition and form of wrought products – Part 3: Chemical composition; German version EN 573-3:1994

DIN EN 573-4:1994-12
Aluminium und Aluminiumlegierungen - Chemische Zusammensetzung und Form von Halbzeug – Teil 4: Erzeugnisformen; Deutsche Fassung EN 573-4:1994
Aluminium and aluminium alloys - Chemical composition and form of wrought products – Part 4: Forms of products; German version EN 573-4:1994

DIN EN 1562:1997-08
Gießereiwesen - Temperguß; Deutsche Fassung EN 1562:1997
Founding - Malleable cast irons; German version EN 1562:1997

DIN EN 1563:1997-08
Gießereiwesen - Gußeisen mit Kugelgraphit; Deutsche Fassung EN 1563:1997
Founding - Spheroidal graphite cast irons; German Version EN 1563:1997

DIN EN 1706:1998-06
Aluminium und Aluminiumlegierungen - Gußstücke - Chemische Zusammensetzung und mechanische Eigenschaften; Deutsche Fassung EN 1706:1997
Aluminium and aluminium alloys - Castings - Chemical composition and mechanical properties; German version EN 1706:1997

DIN EN 1982:1998-12
Kupfer und Kupferlegierungen - Blockmetalle und Gußstücke; Deutsche Fassung EN 1982:1998
Copper and copper alloys - Ingots and castings; German version EN 1982:1998

DIN EN 10025:1994-03
Warmgewalzte Erzeugnisse aus unlegierten Baustählen - Technische Lieferbedingungen (enthält Änderung A1:1993) Deutsche Fassung EN 10025:1990
Hot rolled products of non-alloy structural steels - Technical delivery conditions (includes Amendment A1:1993); German Version EN 10025:1990

DIN EN 12843:1997-07
Vorgefertigte Betonmaste; Deutsche Fassung prEN 12843:1997
Precast concrete masts and poles; German version prEN 12843:1997

Clause National regulation

DIN EN 60383-1 (VDE 0446 Teil 1):1997-05
Isolatoren für Freileitungen mit einer Nennspannung über 1 kV – Teil 1: Keramik- oder Glas-Isolatoren für Wechselspannungssysteme - Begriffe, Prüfverfahren und Annahmekriterien (IEC 60383 1:1993); Deutsche Fassung EN 60383 1:1996
Insulators for overhead lines with a nominal voltage above 1 kV – Part 1: Ceramic or glass insulator units for a.c. systems - Definitions, test methods and acceptance criteria (IEC 60383 1:1993); German version EN 60383 1:1996

DIN EN 60865-1 (VDE 0103):1994-11
Kurzschlußströme - Berechnung der Wirkung – Teil 1: Begriffe und Berechnungsverfahren (IEC 60865 1:1993); Deutsche Fassung EN 60865-1:1993
Short-circuit currents - Calculation of effects – Part 1: Definitions and calculation methods (IEC 60865 1:1993); German version EN 60865-1:1993

DIN EN 61284 (VDE 0212 Teil 1):1998-05
Freileitungen - Anforderungen und Prüfungen für Armaturen (IEC 61284:1997); Deutsche Fassung EN 61284:1997
Overhead lines - Requirements and tests for fittings (IEC 61284:1997); German version EN 61284:1997

DIN VDE 0105-100 (VDE 0105-100):2000-06
Betrieb von elektrischen Anlagen
Operation of electrical installations

DIN VDE 0141 (VDE 0141):1989-07
Erdungen für Starkstromanlagen mit Nennspannungen über 1 kV
Earthing system for power installations with rated voltages above 1 kV

DIN VDE 0210 (VDE 0210):1985-12
Bau von Starkstrom-Freileitungen mit Nennspannungen über 1 kV
Planning and design of overhead power lines with rated voltages above 1 kV

DIN VDE 0210/A4 (VDE 0210/A4):1999-07
Bau von Starkstrom-Freileitungen mit Nennspannungen über 1 kV - Änderung A4
Planning and design of overhead power lines with rated voltages above 1 kV - Amendment A4

DIN VDE 0441-2 (DIN 57441-2) (VDE 0441 Teil 2):1982-10
Prüfung von Kunststoff-Isolatoren für Betriebswechselspannungen über 1 kV - Prüfung von Freiluft-Verbundisolatoren mit glasfaserverstärktem Kern (VDE-Richtlinie)
Tests on insulators of organic material for systems with nominal voltages greater than 1 kV - Tests on outdoor composite insulators with fibre glass core (VDE Guide)

EN 50182:2001
Leiter für Freileitungen aus konzentrisch verseilten runden Drähten
Round wire concentric lay overhead electrical stranded conductors

Clause National regulation

EN 50183:2000
Drähte aus Aluminium-Magnesium-Silizium-Legierung für Leiter von Freileitungen
Aluminium-magnesium-silicon alloy wire for overhead line conductors

EN 50189:2000
Verzinkte Stahldrähte für verseilte Leiter
Zinc coated steel wires for stranded conductors

EN 60889:1997-01
Hartgezogene Aluminiumdrähte für Leiter von Freileitungen (IEC 60889:1987)
Hard-drawn aluminium wire for overhead line conductors (IEC 60889:1987)

EN 61232:1995-03
Aluminium-ummantelte Stahldrähte für die Elektronik (IEC 61232:1993, modifiziert)
Aluminium-clad steel wires for electrical purposes (IEC 61232:1993, modified)

EN 61854:1998-10
Freileitungen - Anforderungen und Prüfungen für Abstandhalter (IEC 61854:1998)
Overhead lines - Requirements and tests for spacers (IEC 61854:1998)

EN 61897:1998-10
Freileitungen - Anforderungen und Prüfungen für Schwingungsdämpfer Typ Stockbridge (IEC 61897:1998)
Overhead lines - Requirements and tests for Stockbridge type aeolian vibration dampers (IEC 61897:1998)

3 Basis of design

3.2.1 Basic requirements

(ncpt) **DE.1** All components of an overhead line shall be selected, designed and installed such that they perform reliably during operation under the climatic conditions to be regularly expected, under the maximum operating voltage, under the effects of the electrical load current and under the short circuit loadings to be expected. Impacts of atmospheric and switching overvoltages shall be taken into consideration.

These requirements are met if an overhead line is designed and installed according to this standard.

4 Actions on lines

4.3 Actions, empirical approach

4.3 DE.1 General

(ncpt) The stipulations for actions on lines are based on the evaluation of meteorological information, on observations at overhead lines and on long-term operational experience. To ease the use of this standard, the stipulations are presented without reference to Part 1.

Clause National regulation

4.3.1 **Permanent loads**

4.3.1 **DE.1 Permanent loads**

(ncpt) Dead loads of towers or poles, of insulator sets and of other fixed equipment and of the conductors resulting from the adjacent span lengths act as permanent loads. Air traffic warning spheres and similar components shall be taken into account as permanent loads.

4.3.2 **Wind loads**

4.3.2 **DE.1 Basis**

(snc) The wind loads depend on the geographical area where the line is built. For the stipulation of wind loads on overhead lines Germany is divided into three zones according to Figure 4.3.2/DE.1.

The wind pressure shall be calculated depending on the height above ground from

$$q = q_0 + 3 \cdot h, \quad (\mathrm{N/m^2})$$

where h is the height above ground level in m and q_0 is the reference wind pressure in gusts with peak wind velocities (2 sec gusts). For practical line design calculations the linear relation above may be replaced by an approximated stepped line to the safe side.

The reference wind pressure q_0 for the zones according to Figure 4.3.2/DE.1 is

Wind zone 1: 800 N/m^2
Wind zone 2: 1050 N/m^2
Wind zone 3: 1300 N/m^2

NOTE 1 The following data according to Eurocode ENV 1991-2-4 can be considered as reference values of the wind velocities represented by 10 min. average values with a return period of 50 years in 10 m height above ground level applicable for the terrain category II according to Table 4.2.1 of Part 1 (see also 4.2.2.1.5):

Wind zone 1: 24,3 m/s
Wind zone 2: 27,6 m/s
Wind zone 3: 32,0 m/s

NOTE 2 The stipulations for wind loads represent the data available in Germany when this standard was drafted. If these basic data change this standard will be amended.

For line sites with an altitude H above 600 m above O.D. the reference wind pressure q_0 for the wind zone 1 is:

$$q_0 = 100 + 7\,H / 6 \qquad \text{in N/m}^2.$$

4.3.2 **DE.2 Wind loads on conductors**

(ncpt) The wind loads on conductors shall be determined for the height of their fixing points at the supports or at insulator sets. The wind loads on conductors act horizontally and perpendicularly to the conductors in the spans. In case of wind action under an angle ϑ to the perpendicular to the conductor in the span the wind load is (Figure 4.3.2/DE.2)

$$Q_{Wc} = q \cdot G_{xc} \cdot C_{xc} \cdot d \cdot L \cdot \cos^2 \vartheta$$

Clause National regulation

where

q wind pressure according to 4.3.2/DE.1,
G_{xc} conductor response coefficient depending on the span length and the dynamic behaviour of the conductor,
$G_{xc} = 0{,}75$ for span lengths up to 200 m
$G_{xc} = 0{,}45 + 60/L$ for span lengths above 200 m
C_{xc} drag factor for conductors according to Table 4.3.2/DE.1,
d diameter of conductor
L Span length. For the design of towers or poles the wind span $(L_1 + L_2)/2$ selected for design has to be used.
ϑ Angle between wind direction and the perpendicular on the conductor (Figure 4.3.2/DE.2).

With the nomenclature according to Figure 4.3.2/DE.2 the wind load can be evaluated for the general case of wind action under an angle Φ to the axis of the crossarm and with the complements to the line angles $\vartheta_1/2$ and $\vartheta_2/2$ of the spans adjacent to the tower from:

In direction of the crossarm axis

$$Q_{\mathrm{Wcx}} = q \times G_{\mathrm{xc}} \times C_{\mathrm{xc}} \times d \left[\pm L_1 \cos^2\left(\phi + \frac{\theta_1}{2}\right) \cos\frac{\theta_1}{2} + L_2 \cos^2\left(\phi - \frac{\theta_2}{2}\right) \cos\frac{\theta_2}{2} \right] / 2$$

Perpendicularly to the crossarm axis

$$Q_{\mathrm{Wcy}} = q \times G_{\mathrm{xc}} \times C_{\mathrm{xc}} \times d \left[\pm L_1 \cos^2\left(\phi + \frac{\theta_1}{2}\right) \sin\frac{\theta_1}{2} - L_2 \cos^2\left(\phi - \frac{\theta_2}{2}\right) \sin\frac{\theta_2}{2} \right] / 2$$

These relations apply to $0 \le \phi \le 90°$. Upper sign applies to $(\phi + \theta_1/2) \le 90°$, lower sign to $(\phi + \theta_1/2) > 90°$.

For a straight line tower there is in case of the wind action under the angle Φ

$$Q_{\mathrm{Wcx}} = q \cdot G_{\mathrm{xc}} \cdot C_{\mathrm{xc}} \cdot d \, \frac{L_1 + L_2}{2} \cos^2 \phi; \qquad Q_{\mathrm{Wcy}} = 0.$$

For a tower with symmetric complements of the line angle $\theta_1 = \theta_2 = \theta$ and wind action in direction of the crossarm axis the wind load on a tower resulting from the wind action on the conductors is

$$Q_{\mathrm{Wcx}} = q \cdot G_{\mathrm{xc}} \cdot C_{\mathrm{xc}} \cdot d \, \frac{L_1 + L_2}{2} \cos^3\left(\frac{\theta}{2}\right).$$

4.3.2 (ncpt) **DE.3 Wind loads on insulators**

The wind load on the insulators acts in direction of the wind action and is equal to

$$Q_{\mathrm{Wins}} = q \cdot 1{,}2 \cdot A_{\mathrm{ins}}$$

where

q wind pressure according to 4.3.2/DE.1,
A_{ins} area of the insulator exposed to the wind.

Clause National regulation

4.3.2 (ncpt) **DE.4 Wind loads on lattice steel towers**

The wind loads on the tower body shall be calculated for the individual panels according to their height above ground level and be assumed as acting in the centre of gravity of the individual tower panel. Depending on the angle ϕ of the wind direction (Figure 4.3.2/DE.3) the following wind load components result approximately:

$$Q_{WTx} = q\,(1 + 0{,}2\,\sin^2 2\phi)\,(A_{T1}\,C_{xT1}\,\cos^2\phi + A_{T2}\,C_{xT2}\,\sin^2\phi)\,\cos\phi\,,$$

$$Q_{WTy} = q\,(1 + 0{,}2\,\sin^2 2\phi)\,(A_{T1}\,C_{xT1}\,\cos^2\phi + A_{T2}\,C_{xT2}\,\sin^2\phi)\,\sin\phi\,,$$

where

Q_{WTx} component in parallel to the crossarm axis,
Q_{WTy} component perpendicularly to the crossarm axis,
q wind pressure according to 4.3.2/DE.1,
ϕ angle between wind direction and crossarm axis,
A_{T1}, A_{T2} areas filled with sections of the faces 1 and 2, respectively (Figure 4.3.2/DE.3,
C_{xT1}, C_{xT2} drag factor of the face 1 and 2, respectively.

The drag factors C_{xT1} and C_{xT2} depend on the solidity ratio of face 1 and 2, respectively (see Figure 4.2.3). For conventional tower designs they can uniformly be taken as 2,8 for designs with angle sections as an approximation.

The wind load on crossarms shall also be calculated according to the height above ground level and to be assumed as acting in the centre of gravity of a crossarm face. Depending on the angle ϕ of the wind direction (Figure 4.3.2/DE.3 the following wind load components result approximately:

$$Q_{WTQx} = 0{,}4\,q\,A_{TQ}\,C_{xQ}\,\cos^2\phi$$

$$Q_{WTQy} = q\,A_{TQ}\,C_{xQ}\,\sin^2\phi$$

where

Q_{WTQx} component in parallel to the crossarm axis,
Q_{WTQy} component perpendicularly to the crossarm axis,
q wind pressure according to 4.3.2/DE.1,
ϕ angle between wind direction and crossarm axis,
A_{TQ} area of the crossarm face filled with profiles (Figure 4.3.2/DE.3,
C_{xQ} drag factor. For angle sections and U-sections $C_{xQ} = 2{,}8$ applies.

If needed, distribution of the wind pressure q along the height of the tower shall be considered where the wind pressure is reduced to 60 % in certain parts such that the most unfavourable loading of individual members results.

Clause National regulation

4.3.2 **DE.5 Wind loads on poles**
(ncpt) The wind load acts in direction of the wind action and is

$$Q_{Wpol} = 1{,}1 \cdot q \cdot C_{xpol} \cdot A_{pol}$$

where

q wind pressure according to 4.3.2/DE.1,
C_{xpol} drag factor according to Table 4.3.2/DE.1,
A_{pol} projected area of a pole.

The coefficient 1,1 takes care of the support response. For crossarms the stipulations of 4.3.2/DE.4 shall be considered accordingly.

4.3.2 **DE.6 Quartering wind**
(ncpt) For all types of towers or poles a quartering wind action shall be considered. In this case a wind action under an angle $\phi = 45°$ shall be assumed. The wind loads on conductors shall be determined according to 4.3.2/DE.2, on insulators according to 4.3.2/DE.3 and on towers and poles according to 4.3.2/DE.4 and 4.3.2/DE.5, respectively. If needed angles ϕ other than 45° shall be considered as well.

Table 4.3.2/DE.1 - Aerodynamic drag factors C_x

Component	C_x
Flat truss structures consisting of profiles	1,6
Square and rectangular lattice towers consisting of profiles	2,8
Flat truss structures consisting of tubes	1,2
Square and rectangular lattice towers consisting of tubes	2,1
Tubular steel, reinforced concrete and wood poles with circular cross section	0,7
Tubular steel and reinforced concrete with dodecanal cross- section	0,85
Tubular steel and reinforced concrete poles with hexagonal or octagonal cross section	1,0
Tubular steel and reinforced concrete poles with square and rectangular cross section	1,4
Conductors up to 12,5 mm diameter	1,2
Conductors above 12,5 up to 15,8 mm diameter	1,1
Conductors above 15,8 mm diameter	1,0
Conductors with other than circular cross section	1,3
Radar markers and aerial warning balls with a diameter between 300 mm and 1 000 mm	0,4

Clause National regulation

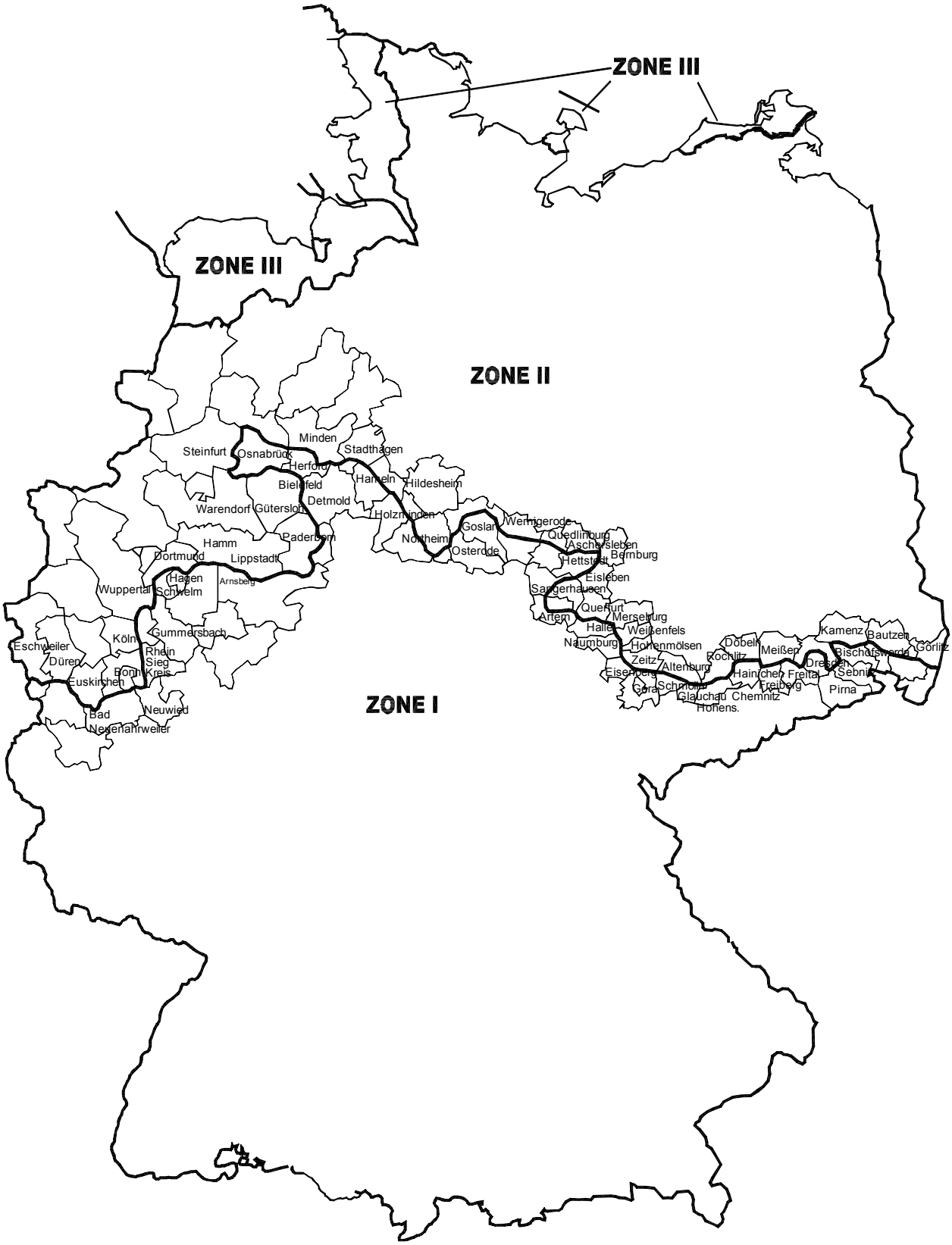

Figure 4.3.2/DE.1 - Wind zones in Germany according to DIN 4131, issue November 1991

Clause National regulation

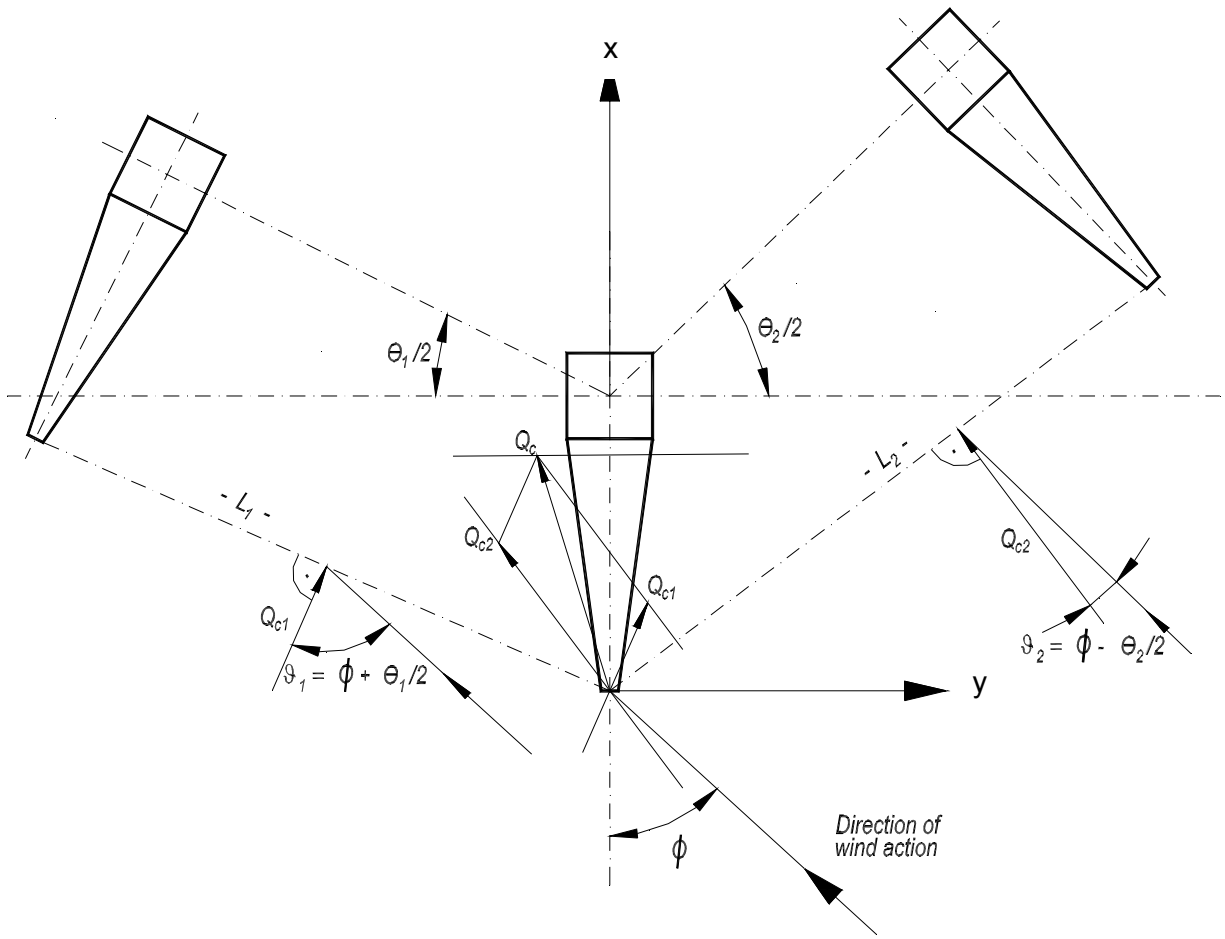

Figure 4.3.2/DE.2 - Wind loads on conductors and resultant wind loading for any wind direction

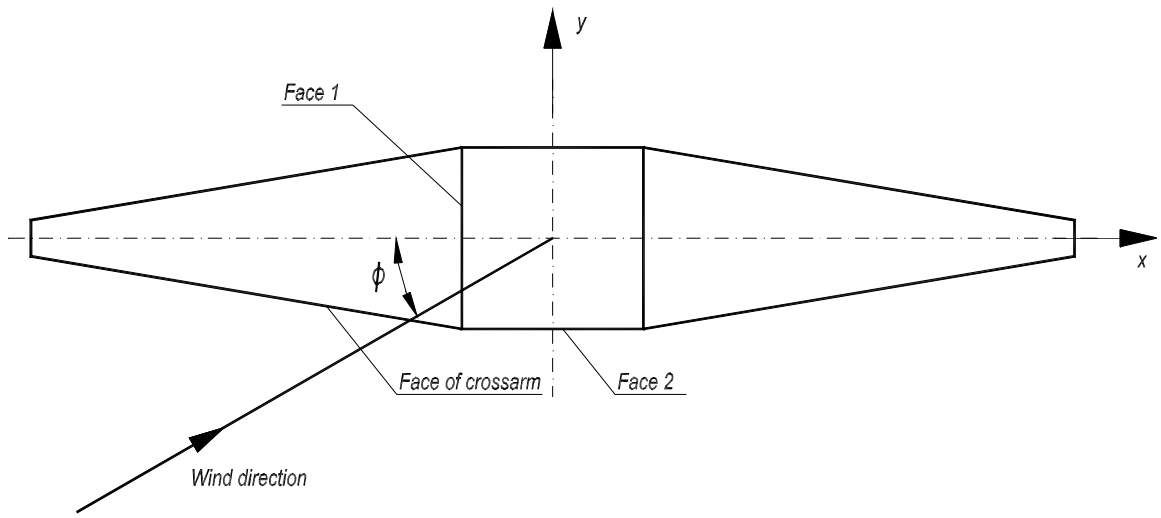

Figure 4.3.2/DE.3- Wind action on towers

Clause National regulation

4.3.3 **Ice loads**

4.3.3 (snc) **DE.1 Basis**

Ice loads are created by accretion due to hard rime, precipitation icing or wet snow at the conductors of overhead lines. Concerning the design ice loads g_T the area of application of this standard is divided into three zones. The ice load is:

Ice load zone 1	$g_T = 5 + 0{,}1d$	N/m,
Ice load zone 2	$g_T = 10 + 0{,}2d$	N/m,
Ice load zone 3	$g_T = 20 + 0{,}4d$	N/m,

where d is the conductor or subconductor diameter in mm.

In zone 1 there are areas where due to the climatic conditions and confirmed by long-term experience only low ice loads occur which did not result in damage of overhead lines.

In zone 2 there are areas where due to the climatic conditions and confirmed by long-term experience high ice loads have to be expected which among other things resulted in damage of overhead lines.

In zone 3 there are areas where due to the climatic conditions, the geographical situation and confirmed by long-term experience very high ice loads have to be expected which resulted to considerable damage of overhead lines.

The classification of the terrain of an overhead line or parts of it into one of the three zones defined above shall be carried out and given reasons by the operator or client of a line.

The classification of a terrain between the zones defined above and a corresponding establishment of design ice load is permissible, thereby.

For extremely exposed situations, for example in areas above 500 m above O.D., at slopes above lakes and so on, higher ice loads than stipulated in zone 3 should be taken into account, if needed.

For insulators an ice load of 50 N/m for an insulator string in zone 1, of 100 N/m in zone 2 and of 200 N/m in zone 3 shall be considered.

For radar markers and air traffic warning spheres with aerodynamically favourable shape (e.g. sphere, double cones) the ice load shall be determined by assuming an ice cover 10 mm thick in zone 1, 20 mm thick in zone 2 and 40 mm thick in zone 3 on the total surface. For other designs the ice load shall be stipulated corresponding to the geometric shape. The specific weight ρ_I of the ice shall be assumed to be 7500 N/m^3.

For towers no ice load needs to be assumed.

Clause National regulation

4.3.4 **Combined wind and ice loads**

4.3.4 (ncpt) **DE.1 Wind on ice-covered conductors**

For the design of all towers wind action on ice-covered conductors shall also be assumed, allowing that 50 % of the wind pressure according to 4.3.2/DE.1 on towers, on equipment and on conductors covered with ice according to 4.3.3. The unit weight force ρ_I of the ice may be taken as 7 500 N/m^3, the aerodynamic drag factor as 1,0.

The equivalent diameter D_I in m of the ice accretion may be calculated from

$$D_I = \sqrt{d^2 + 4g_T/(\pi \cdot \rho_I)} = \sqrt{d^2 + 0{,}000170\, g_T}$$

The conductor diameter d is measured in m and the ice load g_T in N/m.

4.3.6 **Construction and maintenance loads**

4.3.6 (ncpt) **DE.1 Construction loads**

Loads due to erection and maintenance are summarized hereafter under the term construction loads.

Vertically acting loads of at least 1,0 kN shall be assumed for crossarms of suspension and angle suspension towers or poles and at least 2,0 kN for all other types of towers or poles. In case of lattice steel structures these forces shall act at the individually most unfavourable nodes of the lower chords of one crossarm face, and in all other cases in the axis of the crossarm at the attachment points of the conductors.

For all members, which can be climbed and are inclined with an angle less than 30° to horizontal, a construction load of 1,0 kN acting vertically in the centre of the member shall be assumed, however, without any other loads.

Step bolts and stirrups shall be rated for a concentrated load of 1,0 kN acting vertically at a statically unfavourable position.

For construction loads the partial factor γ_P = 1,5 applies.

4.3.7 **Security loads**

4.3.7.1 (ncpt) **DE.1 Security loads**

Security loads are considered in 4.3.10/DE.1.2 under the loading cases H, J, K and L.

4.3.8 **Short-circuit loads**

4.3.8 (ncpt) **DE.1 Short-circuit loads**

Short-circuit loads are not specified and not required in general for overhead lines in Germany. Such loads may govern the rating in the span between the overhead lines and the substations.

Clause National regulation

4.3.9 **Other loads/extension of utilisation**

4.3.9 (ncpt) **DE.1 Extension of utilisation**

In case of an extension of utilisation of overhead line supports for additional applications such supports shall be considered as overhead line towers, in the sense of this standard.

Every planned extension of utilisation requires a static analysis of the existing towers.
The check of stability is limited to those parts of the tower and its foundations, which are affected by the loads resulting from the additional applications. For this check only such loading cases shall be considered, which are affected by the loads due to additional applications.
Regularly, the loading cases A to F according to 4.3.10/DE1.2 shall be considered.

Exceptional loading needs not to be verified. A check of conductors, insulator sets and crossarms is, therefore, not required, if they are not affected by additional equipments.

4.3.9 (ncpt) **DE.2 Aeolian vibrations**

Loads due to aeolian vibrations (see 9.2.4/DE.3) need in general not to be considered for supports of overhead lines according to this standard

4.3.10 **Loading cases**

4.3.10 **DE.1 Loading cases for towers or poles and foundations**

4.3.10 (ncpt) **DE.1.1 General**

When analysing towers or poles and foundations the loads assigned to the individual loading cases in 4.3.10/DE.1.2 shall be assumed as acting simultaneously. For each member the loading case shall be selected which produces the maximum loading.

If section towers are systematically subjected to permanent unbalanced tensile forces or to permanent torsional loadings this shall be considered. If initially the circuits of towers are to be only partially installed, then this shall be considered when analysing the towers. Partial installation needs not to be considered in case of loading case H.

In case that a tower or pole of a multiple circuit line is used for the individual circuits in a different manner then the loading cases which are given for the tower types according to 4.3.10/DE.1.2 shall be combined according to their employment for the individual circuits.

The conductor tensile forces shall be determined for all loading cases with actions according to the 4.3.2/DE.2, 4.3.3/DE.1 and 4.3.4/DE.1 without partial factors.

Clause National regulation

4.3.10 (ncpt) **DE.1.2 Description of loading cases**

The loading cases consider the following combinations of loadings:

a) Meteorologically related loadings (loading cases A to G) with
   - wind action according to 4.3.2/DE.1 in three main directions (loading cases A to C);
   - wind actions in three main directions combined with simultaneous ice accretion according to 4.3.4/DE.1 (loading cases D to F);
   - actions on towers or poles with uplift loadings (loading case G).

b) Loadings on section or angle section towers to provide rigid points in an overhead line (loading case H).

c) Construction loads (loading case I).

d) Exceptional loadings due to unbalanced ice accretion or ice shedding (loading cases J to L).

In detail the following loading cases apply; sub-divisions of load cases may result from the range of application (variation of weight span, variation of line angle, etc.):

Loading case A
Permanent loads and wind action in *x*-direction (Figure 4.3.2/DE.2 and 4.3.2/DE.3, corresponding conductor horizontal tensile forces at +5 °C.

Loading case B
Permanent loads and wind action in *y*-direction (Figure 4.3.2/DE.2 and 4.3.2/DE.3, corresponding conductor horizontal tensile forces at +5 °C.

Loading case C
Permanent loads and quartering wind according to 4.3.2/DE.6, corresponding conductor horizontal tensile forces at +5 °C.

Loading case D
Permanent loads, wind in *x*-direction (Figure 4.3.2/DE.2 and 4.3.2/DE.3 and ice loads, wind loads reduced according to 4.3.4/DE.1, corresponding conductor horizontal tensile forces at –5 °C.

Loading case E
Permanent loads, wind in *y*-direction (Figure 4.3.2/DE.2 and 4.3.2/DE.3 and ice loads, wind loads reduced according to 4.3.4/DE.1, corresponding conductor horizontal tensile forces at –5 °C.

Loading case F
Permanent loads, quartering wind and ice loads, wind loads reduced according to 4.3.4/DE.1, corresponding conductor horizontal tensile forces at –5 °C.

Loading case G
Permanent loads, corresponding conductor horizontal tensile forces at –20 °C
as well as permanent loads and ice loads in one of the adjacent spans, no ice load in the other adjacent span, whereby 50 % of the ice loads according to 4.3.3/DE.1 shall be assumed, corresponding conductor horizontal tensile forces at –5 °C.

NOTE Loading case G shall be supplementary applied in case of uplift forces.

Clause National regulation

Loading case H
Loading case H shall apply in case of section and angle section towers.
These towers shall be assumed with all circuits installed as planned.
Permanent loads, whereby permanent loads on all conductors act at –20 °C as well as permanent loads and ice loads acting on all conductors at –5 °C.
One-sided design horizontal tensile force of one conductor and two thirds of the conductor horizontal tensile forces of all other conductors acting on one tower side in line direction.

Loading case I
Permanent loads and construction loads according to 4.3.6/DE.1, corresponding conductor horizontal tensile forces at +5 °C.

Loading case J
Permanent loads and ice loads, whereby permanent and ice loads on all conductors act at – 5 °C
For supports which carry up to two circuits the horizontal force of one conductor shall be assumed as one-sided reduced depending on the type of support.
For supports which carry more than two circuits the following shall be duly considered:

- For the third and fourth as well as for the fifth and sixth circuits the horizontal force of a conductor shall be assumed additionally as reduced by half of the value applying for the first and the second circuit.
- Only the horizontal force of one conductor shall be assumed as reduced for each half of a crossarm.
- The conductors with one-sided conductor tensile forces acting in the same direction and the circuits shall be selected such that the most unfavourable loading results for the individual components.
- For branch-off supports the number of circuits is equal to the sum of the circuits of the continuing and the branching lines. The one-sided reduced conductor tensile forces shall be assumed for these supports such that the torsional loading of the continuing and branching lines are summed up.

In case of DC and mono-phase AC circuits provisions shall be made analogously in respect to the number of conductors.

In case of suspension and angle suspension towers the horizontal tensile force of one conductor shall be reduced to one side as follows: In case of single conductors by 50 %, in case of bundle conductors with lengths of insulator sets up to 2,5 m by 35 %, in case of bundle conductors with lengths of insulator sets above 2,5 m by 25 % and in case of earth wires by 65 %.
If the torsional loading of towers is prevented or reduced by suitable measures (such as release clamps, rotating crossarms, stays etc.) the effect achieved by such measures may be taken into consideration to an extent as it is achieved by these measures.

In case of angle towers, section towers, angle section towers, dead end towers and angle dead end towers the horizontal tensile force of one single or bundle conductor shall be assumed to be reduced on one side by 100 %.

Clause National regulation

Loading case K
Permanent loads and ice loads, whereby permanent loads and ice loads on all conductors act at –5 °C.
In case of suspension and angle suspension towers the horizontal tensile forces of all conductors shall be assumed to be reduced by 20 % in case of line post insulators or lengths of suspension insulator sets up to 2,5 m, by 15 % in case of lengths of suspension insulator sets above 2,5 m and by 40 % for earth wires.

In case of angle, section and angle section towers the horizontal tensile forces shall be assumed to be reduced on one side by 40 %.

Loading case L
Permanent loads and ice loads, corresponding conductor horizontal tensile forces at – 5 °C; failing of one insulator string of a multiple insulator set.

NOTE Effects of loading case L are decisive for crossarms only.

4.3.11 **Partial factors for actions (loadings) and material for towers and poles**

4.3.11 (ncpt) **DE.1 General**
The specified values replace the information given in Table 4.3.2.

4.3.11 (ncpt) **DE.2 Partial factors for tower bodies and crossarms**
Each loading case combines loads of different origin. All actions are determined by their characteristic values and to be multiplied by partial factors.

The relationship given in 4.3.11 and the applying terms are given in a simplified mode as follows:

$$E_d = f\{\gamma_G G_K ; \gamma_W Q_{WK} ; \gamma_I Q_{IK} ; \gamma_A Q_{AK} ; \gamma_C Q_{CK}\}$$

where

E_d total loading (design value of action)
G_K dead weight of conductors, insulators and structures
Q_{WK} wind load as defined in 4.3.2/DE.1 to DE.6
Q_{IK} ice accretion on conductors as defined in 4.3.3/DE.1
Q_{PK} construction loading as defined in 4.3.6 DE.1 (erection and maintenance)
Q_{CK} loads due to conductor horizontal tensile forces under consideration of temperature variation, wind action and ice action as given in 4.3.10/DE.1

The partial factors, γ_G, γ_W, γ_I, γ_P and γ_C include the combination factor Ψ and also take care of

- reliability aspects,
- combinations of actions,
- co-ordination of strength ,
- definition of loading cases.

Clause National regulation

The following data apply for partial factors

$\gamma_G = \gamma_W = \gamma_I = \gamma_C = 1{,}35$	for loading cases A to I where the action is unfavourable (load increasing);
$\gamma_G = \gamma_I = 1{,}0$	for loading cases A to F when the action is favourable (load decreasing), (to be applied only in case of suspension towers);
$\gamma_G = \gamma_W = \gamma_I = \gamma_C = 1{,}0$	for loading cases J to L (exceptional loading cases);
$\gamma_P = 1{,}5$	for construction loads in loading case I.

NOTE

γ_G Partial factor for dead load
γ_W Partial factor for wind load
γ_I Partial factor for ice load
γ_P Partial factor for construction loads
γ_C Partial factor for conductor horizontal tensile forces.

4.3.11 **DE.3 Partial factors for structural materials**

(ncpt) Table 4.3.11/DE.3 gives the partial factors for structural material used for towers and poles. For concrete poles reference is made to DIN EN 12843.

Table 4.3.11/DE.3 - Material partial factors for structural materials

Eurocode	Material, type of strain	Material partial factor γ_M
EC 2 Concrete and reinforced concrete	Compressive concrete strength	1,5
	Compressive concrete strength for prefabricated parts	1,4
	Reinforcement steel, yield strength or $\sigma_{0,2}$	1,15
EC3 Steel	Resistance of sections and stability (yield strength)	1,1
	Resistance of bolted and welded connections (ultimate tensile strength)	1,25
	Members with boreholes in tension (ultimate tensile strength)	
	Steel stranded conductors	1,65

5 Electrical requirements

5.2.1 Normal current

5.2.1 **DE.1 Conditions for verification of the maximum design temperature of conductors**

(ncpt) The maximum design temperature of conductors shall be verified for an ambient temperature of 35 °C and a wind velocity of 0,6 m/s acting rectangularly to the conductors.

Clause National regulation

5.3.5.3 **Empirical method**

5.3.5.3 (ncpt) **DE.1 Compliance of condition "a_{som}"**

Only to stationary (and not to moving) crossing objects a clearance according to 110 % of the minimum flashover gap a_{som} of the used insulator sets is required.

5.4 **Internal and external clearances**

5.4 (ncpt) **DE.1 General considerations for verification of clearances**

Independently of this standard, the standard DIN VDE 0105 shall be complied with in case of any works close to the overhead lines. The verification of minimum clearances required in 5.4 is carried out in three steps in principle:

a) *Determination of the basic electrical clearances D_{el} and D_{pp}.*
For this purpose the theoretical method according to Annex E (Part 1) as well as the use of empirical values according to Table 5.5 (Part 1) may be applied. However, the preferable use of Table 5.5 (Part 1) is recommended.

b) *Verification of the internal clearances between the phases and between phases and earthed components or earth wires according to 5.4.3 (Part 1)*
It shall be taken into account that different clearances (D_{pp} and D_{el}, respectively) have to be complied with between the phases or between phases and earthed components or earth wires, respectively, which may be reduced by the factor K_1 stipulated in 5.4.3/DE.1 in case of the swung conductor conditions. Therefore, four different minimum clearances (D_{pp} and D_{el}, respectively in still air; K_1 D_{pp} and K_1 D_{el}, respectively in swung condition) have to be verified depending on the loading conditions to be considered according to 5.4.2.2 (Part 1).

The approximate approach described in 5.4.3/DE.2 permits under certain conditions the determination of the clearances between the phases or between the phases and the earth wires, respectively in still air and in midspan such that compliance with the minimum clearances in the swung condition (K_1 D_{pp} and K_1 D_{el}, respectively) may be assumed. When applying this approximate approach extensive computer added calculations of the swinging of phases relatively to each other or to the earth wires, respectively, will be avoided.

c) *Verification of the external clearances to the ground or to crossed objects*
In this case the minimum clearances stipulated in 5.4.4 and 5.4.5 (Part 1) in principle consist of the clearance D_{el} and an additional safety distance. The loading cases to be considered in this case are defined in the 5.4.4 and 5.4.5 (Part 1) whereby the relevant wind and ice loads are stipulated in 5.4.2.2/DE.1.

If the basic electrical clearance D_{el} according to Table 5.5 (Part 1) is used the compliance of the minimum clearance of 110 % of the distance a_{som} according to 5.3.5.3 (Part 1) is required in case of stationary crossing objects. In this case it is considered as sufficient to determine the minimum discharge gap of the insulator set in a section of three towers before and three towers after the crossing span. This investigation shall be carried out for each circuit separately, if necessary. The value determined by this investigation is defined as a_{som} for the crossing span.

Clause National regulation

If in a given application the condition

$$1{,}1 \cdot a_{som} > D_{el} + \text{safety distance}$$

is fulfilled the 110 % of the value a_{som} shall be used as minimum clearance to than crossing objects. In all other cases the minimum clearance shall be D_{el} + safety distance.

EXAMPLE:
Crossing object: Roof with the slope > 15°
380-kV-line,
distance a_{som} for the crossing span: 4,50 m
Minimum distance according to Table 5.4.5.2 (Part 1):

c = 2 m + D_{el} = 2 m + 2,80 m = 4,80 m.

Check of the condition "a_{som}":

1,1 · 4,50 m = 4,95 m > 4,80 m.

In this case a minimum distance of 4,95 m to the roof shall be complied with.

5.4 (ncpt) **DE.2 Application for systems with 16,7 Hz**

The stipulations in 5.4 apply definitely also to overhead lines in systems which are operated with a frequency of 16,7 Hz.

5.4.2.2 **Loading cases for calculation of clearances**

5.4.2.2 (snc) **DE.1 Loading cases for calculation of clearances**

The design wind load for the determination of electrical clearances is 58 % of the wind pressure stipulated in 4.3.2/DE.1 and the assumptions for calculation according to 4.3.2/DE.2 shall be applied.

NOTE This wind load has a return period of three years, according to Part 1, annex B, Table B.1. The operator of a line should stipulate higher wind loads if such wind loads occur frequently and external objects would be at risk by swung conductors.

In case of calculation of clearances under wind load condition a conductor temperature of constantly +40 °C is assumed; the effect of the wind load on the conductor sag may be neglected.

For the determination of electrical clearances the ice loads stipulated in 4.3.3/DE.1 are assumed as design ice loads.

When calculating clearances under ice load conditions the conductor temperature is assumed to be constant at –5 °C.

As required in 5.4.5/DE.1.4 and 5.4.5.4/DE.1 in case of crossings a local ice load only within the crossing span shall be considered. In this case 50 % of the ice loads defined in 4.3.3/DE.1 shall be assumed in the crossing span and no ice load in all the other spans of the line section.

The verification of clearances under extreme wind conditions as mentioned in 5.4.2.2.3 (Part 1) is not required.
Similarly, a verification of clearances under simultaneous action of wind and ice is not required.

Clause National regulation

5.4.3 **Clearances within the span and at the tower**

5.4.3 (ncpt) **DE.1 Reduction factor under design wind load conditions**

In case of design wind load conditions the minimum clearances required between phase conductors or between a phase conductor and earthed parts, respectively the values D_{pp} and D_{el} given in Table 5.5 (Part 1) are multiplied by the factor K_1 = 0,75.

5.4.3 (ncpt) **DE.2 Approximate method to calculate the clearances within the span to be applied in case of equal cross sections, materials and sags of conductors**

In case of identical conductors within a span the following approximate approach for evaluating minimum clearances in the middle of the span may be used:

If this method is used, the minimum clearance *c* of the conductors at mid-span in still air shall be at least:

$c = k\sqrt{f + l_k} + 0{,}75 \cdot D_{pp}$ in m, however, not less than *k* in m in the case of phase conductor to phase conductor

$c = k\sqrt{f + l_k} + 0{,}75 \cdot D_{el}$ in m, however, not less than *k* in m in the case of phase conductor to earth wire

with:

f sag in m of the conductor with a temperature of +40 °C;

l_k length in m of that part of the insulator set swinging orthogonal to the line direction;

k coefficient according to Table 5.4.3/DE.2;

D_{pp} minimum clearance (phase to phase) in meters which depends on the voltage according to Table 5.5 of Part 1;

D_{el} minimum clearance (phase to earth) in meters which depends on the voltage according to Table 5.5 of Part 1;

If circuits with differing operational voltages run in parallel on the same structures, then the most unfavourable value for D_{pp} or D_{el} shall be used.

The swing angle φis obtained from the ratio of the wind load Q_{WC} acting on the conductor according to 4.3.2/DE.2 and the dead weight of the conductor G_K. It is calculated by:

$$\varphi = \arctan\left(Q_{WC} / G_K\right)$$

According to 5.4.2.2/DE.1 the wind pressure q may be reduced to 58 % of the wind pressure according to 4.3.2/DE.1.

Clause National regulation

Table 5.4.3/DE.2 - Values for coefficient k

Range of swing angle degree	Coefficient k Angle corresponding to Figure 5.4.3/DE.2		
φ	0° to 30°	> 30° to 80°	> 80° to 90°
≥ 65,1	0,95	0,75	0,70
55,1 to 65,0	0,85	0,70	0,65
40,1 to 55,0	0,75	0,65	0,62
≤ 40,0	0,70	0,62	0,60

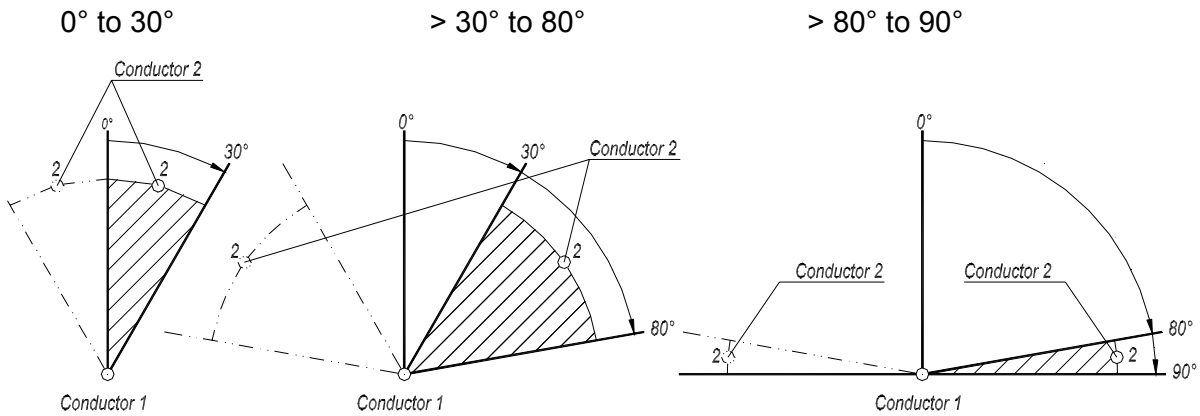

Figure 5.4.3/DE.2 - Position of conductor "2" relative to vertical axis through conductor "1"

5.4.3 **DE.3 Approximate method to calculate internal clearances in the span in case of conductors with different cross sections, materials or sags**

(ncpt) In the case of conductors with different cross sections, materials or sags the higher factor *k* from Table 5.4.3/DE.2 and the higher sag in case, where sags vary, shall be used for determining the clearances according to 5.4.3/DE.2.

In addition to the clearances for conductors in still air the clearances between swung conductors shall also be investigated in this case. For this, the wind load shall be assumed according to 5.4.2.2/DE.1. It shall be proved that whilst dynamic wind pressures differing by 40 % are acting on the individual conductors, a clearance not less than 0,75 D_{pp} or 0,75 D_{el} is kept, where D_{pp} and D_{el} follow from Table 5.5 (Part 1).

5.4.3 **DE.4 Effect of the insulator set on the determination of clearances at supports**

(ncpt) When evaluating the clearances at the tower according to 5.4.3 (Part 1) the swing angle shall be considered for deflection of the insulator set, which results from the ratio of the wind load acting on the conductor and insulator set to the dead load of the conductor and insulator set.

For this, the wind load on conductor shall be determined using the formula

Clause National regulation

$$Q_{Wc} = q_c\, C_{xc} \cdot d \cdot G_{xc}\, L \qquad \text{in kN,}$$

where

C_{xc} Aerodynamic drag factor as defined in 4.3.2/DE.1;
q_c 58 % of the wind pressure as defined in 4.3.2/DE.1 (see 5.4.2.2/DE.1);
d Conductor diameter in m;
L Wind span $(L_1 + L_2)$ / 2 in m;
G_{xc} Conductor response factor $G_{xc} = 0{,}75$ for $L < 200$ m,
$G_{xc} = 0{,}45 + 60/L$ for $L > 200$ m.

In case of angle suspension towers the resultant of the conductor tensile forces under wind load and at +5 °C shall be considered in addition to the wind loads on conductors.

NOTE The kinematic function of the insulator sets should be studied and assessed independently of the verification of sufficient electrical clearances.

5.4.4 **Minimum clearances to ground in areas remote from buildings, roads, railways and navigable waterways**

5.4.4 **DE.1 Agricultural work under a transmission line**
The requirements of DIN VDE 0105 Part 15 shall be met during agricultural working under transmission lines.

5.4.5 **Clearances to buildings, traffic routes, other lines and recreational areas**

5.4.5 **DE.1 Additional requirements for crossings**
(ncpt) **DE.1.1 General**
The following additional requirements shall be met in individual cases of crossings to the extent specified.

5.4.5 **DE.1.2 Attachment of conductors to multiple insulator sets**
(ncpt) Suspension or termination of conductors shall be carried out by multiple insulator sets in which the number of the insulator strings shall be at least the same as generally in the overhead line (see also 10.7/DE.3).

5.4.5 **DE.1.3 Release clamps and rotating crossarms**
(ncpt) Release clamps and rotating crossarms may not be used at crossing towers.

5.4.5 **DE.1.4 Clearance in case of local ice load of spans**
(ncpt) For the evaluation of the clearance it shall be assumed, that the conductors in the crossing span are loaded by 50 % of the ice load according to 4.3.3/DE.1 at -5° C while the conductors in all other spans of the line section are unloaded.

5.4.5 **DE.1.5 Clearance in between conductors in case of local ice load**
(ncpt) For the evaluation of the clearances between the conductors it shall be assumed that one of these conductors is loaded in the crossing span by 50 % of the ice according to 4.3.3/DE.1 at –5 °C while the other conductors are unloaded. In this case a clearance of 0,75 D_{pp} according to Table 5.5 (Part 1) shall be maintained between the conductors of the overcrossing overhead line.
This requirement applies only in case of traffic routes and overhead lines.

Clause National regulation

5.4.5 **DE.1.6 Clearance between the conductors in case of failure of an insulator string**

(ncpt) In case of failure of one string of a multiple insulator set the clearance between the conductors in the crossing span shall be at least 0,75 D_{pp} according to Table 5.5 (Part 1). In this case the sags at a temperature of –20 °C shall be taken into account.
This requirement applies only in case of crossing of traffic routes and overhead lines.

5.4.5 **DE.2 Clearances to wind energy converters**

(ncpt) Between the rotor blade tip of the wind energy converter in the most unfavourable position and the closest conductor of the overhead line in still air the following clearances shall be obeyed:

- more than or equal three times rotor diameter, if the conductors are not damped against wind induced vibrations.

- more than one time rotor diameter, if the conductors are damped against wind induced vibrations.
  If it is ensured that the overhead transmission line is outside the wake of the wind energy converter and the distance between the rotor blade tip in the most unfavourable position and the closest conductor is more than one time rotor diameter, it is possible to avoid the damping of the conductors.

Furthermore, the rotor blade tip is not allowed to project over the right-of-way along the overhead line.

5.4.5.2 **Residential and other buildings**

5.4.5.2 **DE.1 Fire hindering roofs**

(ncpt) Roofs with roofings according to DIN 4102, Part 7 are considered as fire hindering.

5.4.5.3 **Traffic routes**

5.4.5.3 **DE.1 Definition**

(ncpt) Traffic routes are defined as motorways, highways, provincial and county roads, local junction roads and frequently used service and access roads, trolley bus lines and ropeway installations, railways with and without overhead contact lines and waterways.
Roads, that do not fit that definition, are defined as minor roads.

5.4.5.3 **DE.2 Clearances to railways in case of planned electrification**

In case of planned electrification the minimum clearance to the top of the rails shall be 11,5 m + D_{el}.

5.4.5.4 **Other power lines or overhead telecommunication lines**

5.4.5.4 **DE.1 Load cases to be considered for calculating clearances between crossing power lines**

(ncpt)

Load case 1:

- maximum sag of the overcrossing line according to 9.2.4/DE.4,
- sag of the undercrossing line at conductor temperature of +40 °C.

Clause National regulation

Load case 2:
- sag in case of local ice load of conductors according to 5.4.5/DE.1.4 in the span for the overcrossing line,
- sag at a conductor temperature of -5° C without ice load for the undercrossing line.

Load case 3:
- wind load for the determination of electrical clearances according to 5.4.2.2/DE.1 perpendicularly to the first line (over - or undercrossing) at a conductor temperature of +40°C.
- simultaneously wind load for the determination of electrical clearances according to 5.4.2.2/DE.1 acting on the other line, but multiplied by the square of the cosine of the angle of incidence (angle between the vertical to the line and the wind direction). The wind pressure shall be reduced in this case by 0 % up to 40 %.

Horizontal clearance between the vertical axis at the swung conductor and components of a telecommunication line
In Germany, the requirement 1,0 m + Del applies to the horizontal clearance.

5.6.1 **Electric and magnetic fields under a line**

5.6.1 **DE.1 Precaution values**
(A-dev) Applicable precaution values are defined by the German Federal Directive „26. Verordnung zum Bundesimmissionsschutzgesetz vom 22. November 1996“.

5.6.2 **Electric and magnetic field induction**

5.6.3 **Interference with telecommunication circuits**

5.6.2/5.6.3 **DE.1 Technical recommendations for interferences**
(ncpt) Moreover, the technical recommendations of the arbitration board for interference issues (Schiedsstelle für Beeinflussungsfragen) should be taken into consideration.

6 Earthing systems

6.2.3.2 **Current rating calculation**

6.2.3.2 **DE.1 Specification of currents**
(ncpt) Table 6.2.3.2/DE.1 specifies the type of short-circuit current to be used for the rating of earthing systems.

Clause National regulation

Table 6.2.3.2/DE.1 - Currents decisive for the rating of the earthing system

Type of the system	Decisive for thermal rating[1)]		Decisive for earthing and touch voltages
	Earth electrode	Earthing conductor	
Systems with isolated return point	- [2)]	I''_{kEE} [4)]	$r \times I_C$ [5)]
Resonant earthed system	- [2)]	I''_{kEE} [4)]	$r \times I_{RES}$
Systems with low resistant neutral earthing	I''_{k1} [3)]	I''_{k1}	$r \times I''_{k1}$
Resonant earthed systems and systems with temporarily low resistant neutral points	- [2)]	I''_{kEE}	$r \times I_{RES}$

1) The minimum cross-sections according to 6.2.2.2 (Part 1) shall be considered.

2) The minimum cross-sections according to 6.2.2.2 (Part 1) are sufficient.

3) If several paths of the current are possible the resulting division of currents may be considered.

4) If the duration of a failure is lower than 1 s the currents I_C or I_{RES}, respectively, may be used.

5) If in a locally limited high-voltage system, for example in an industrial installation, an earth fault will last presumably over a longer period, for example several hours, then I''_{kEE} should be considered.

Legend:

I_C Calculated or measured capacitive earth fault current.

I_{RES} Earth fault residual current. If the precise value is not known 0,1 times I_c may be used for calculation.

I''_{kEE} Double earth fault current, it may be assumed as 85 % of the three-phase initial short-circuit alternate current.

I''_{k1} Initial symmetrical short-circuit current in case of single-phase earth fault.

r Earth wire reduction factor (see Annex G.6)

6.2.4.2 **Measures for the observance of permissible touch voltages**

6.2.4.2 (ncpt) **DE.1 Supplementary methods**

Supplement to Figure 6.1 (8) in Part 1: Measures to ensure the safety of persons in case of too high touch voltages are, for example:

- Blocking by electrically non-conductive fences (as well suitable plantations),
- Insulation of the site,
- Potential voltage control

and the measures described in 6.2.4.4 (Part 1).

Clause National regulation

6.4. **Earthing measures against lightning effects**

6.4 (ncpt) **DE.1 Avoiding of back-flashovers**

In case of a lightning stroke into earthed components of an overhead line there may result a discharge to operationally live parts (back-flashover). These flashovers must not be expected in general if the impulse earth resistance R_{St} suffices the following relation:

$$R_{St} \leq \frac{U_{St}}{I_{St}}$$

where

R_{St} Impulse earth resistance of the tower earthing. In case of a limited spatial extent (earth rods < 10 m, radial counter poise < 20 m) the earth resistance R_E (see Annex H.2.2 (Part 1)) may be used as an approximation.
U_{St} Lightning impulse withstand voltage of the insulation ($U_{90\%_ff_is}$)
I_{St} Peak value of the lightning current on the tower

Table 6.4/DE.1 - Cumulative frequency of lightning currents in towers of lines with shield wires

Lightning current I_{St} on the tower up to	20 kA	30 kA	40 kA	50 kA	60 kA
Cumulative frequency of all lightning strokes	80 %	90 %	95 %	98 %	99 %

NOTE This means for example that the lightning current does not exceed 40 kA in 95 % of all lightning strokes.

6.6 **Site inspection and documentation of earthing systems**

6.6 (ncpt) **DE.1 Indications for inspection of earthing systems**

For inspection of earthing systems of overhead line towers it is sufficient to check their condition at some sites approximately every five years. The verification can be achieved by the following methods:

- Visual inspection (earth electrodes and earth conductors),
- Measurements (see annex H 4.2 (Part 1)).

7 Supports

7.1 **Initial design considerations**

7.1 (ncpt) **DE.1 Loads and loading conditions**

Towers shall be rated according to their function and to the appropriate loading cases as defined in 4.3.10/DE.1. Ultimate loads are the basis for the structural design.

Clause National regulation

7.1 **DE.2 Tower outline and geometry**
(ncpt) Basic dimensions and outline of structures shall be determined before starting the structural design considering the electric requirements, number of circuits, span lengths, foundation conditions and design of insulator strings.

7.2 **Materials**

7.2 **DE.1 Material of steel components**
(ncpt) International standards for materials of steel components are given in 2.3 (Part 1). In general only the structural steel types S235JO and S235J2G3/G4 as well as S355JO and S355J2G3/G4 according to DIN EN 10025 shall be used.

7.2 **DE.2 Material of bolts**
(ncpt) In general, only the strength qualities 4.6, 5.6, 8.8 and 10.9 according to DIN EN 20898-1 shall be used.

7.3 **Lattice steel towers**

7.3.1 **General**

7.3.1 **DE.1 Minimum dimensions of components**
(ncpt) Minimum member thickness and minimum bolt diameter shall be specified under due consideration of potential corrosion effects, especially if thin-walled cold formed sections are used.

The thickness of components shall not be less than 4 mm. In case of hollow sections used for tower members the thickness may be reduced to 3 mm if effective protection against corrosion is ensured.

If weakened by boreholes, angle sections with a width below 35 mm and flat bars with a width below 30 mm are inadmissible.

7.3.5.2.1 **Global analysis**

7.3.5.2.1 **DE.1 Determination of member forces**
(ncpt) When determining the forces in the members of the tower body of a four-legged tower the following simplified assumptions may be used. Special attention must be given to those parts of the structure where the external loads are applied.

Horizontal loads may be separated into the direction of the tower faces and may be distributed equally on the two faces concerned. Each tower face may than be analysed for the proportion of loading assigned to it as a plane truss. In case of leg members the forces resulting from two adjacent tower faces have to be summed up.

If a horizontal load *F* results in a torsional moment *M* related to the vertical axis of the tower body, the horizontal forces per tower face may be determined according to Figure 7.3.5.2.1/DE.1. For the resulting horizontal forces, each individual tower face may be treated as a plane truss structure.

Clause National regulation

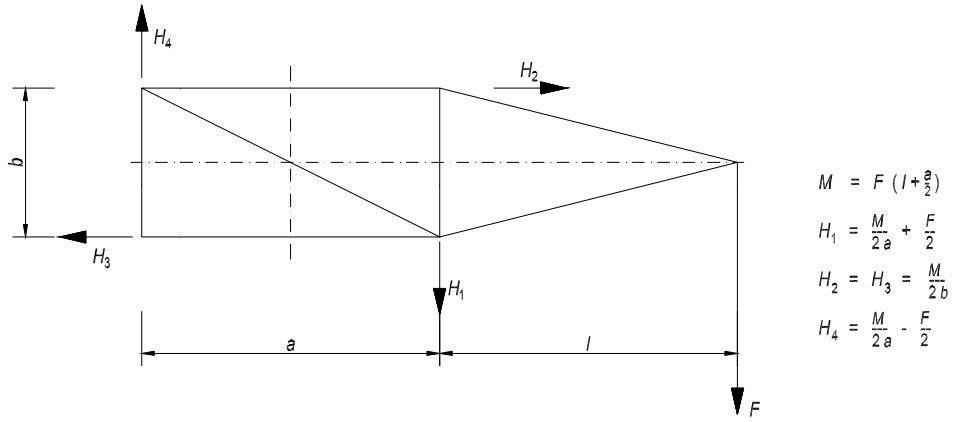

Figure 7.3.5.2.1/DE.1 - Distribution of a torsional moment turning around the tower body axis on the faces of the tower body

When using this approach the ratio *a/b* may not exceed 1,5. The shape of the tower must be prismatic or correspond to a truncated pyramid. At all crossarm levels and at changes of slope of leg members, horizontal bracings shall be provided and the adequacy of their strength shall be proven.

7.3.5.2.1 **DE.2 Eccentricity of member connections**
(ncpt) The eccentricity of the connections of members at nodes shall be kept as small as possible.

For leg members of lattice steel towers the eccentricity at joints may be disregarded provided that the centroidal axis of the joint area is calculated in an average position.

In case of compression bracing members of lattice steel towers consisting of one single angle (for example members between leg members or between chords) being connected by only one of the angle legs the eccentricity of load application may be disregarded.

7.3.6.2 **Connections with bolts**

7.3.6.2 **DE.1 Securing of bolted connections**
(ncpt) Bolted connections shall be secured against loosening. This can be achieved by an adequate tightening of the nuts. Spring washers may be used as an indication for sufficient tightening.

7.3.6.2 **DE.2 Punching of holes for rivets and bolts**
(ncpt) Due considerations shall be made on defining the limit of material thickness between the methods of drilling and punching. The effect of the material ductility has to be duly considered. Steel according to 7.2/DE.1 is sufficiently ductile and may be punched, therefore. However, this does not apply to holes for rivets and bolts in angle sections and plates of more than 12 mm thickness. Permanent supervision shall ensure that sharp punches and suiting dies are used for the manufacturing.

Structural members of crossarms permanently loaded in tension shall not be punched.

Clause National regulation

7.3.6.2 **DE.3 Dimensions of connecting elements in joints**
(ncpt) Diameters of bolts less than 12 mm are not permissible for structurally loaded members. The minimum strength quality for bolts M12 is 5.6. Rivets with a finished diameter less than 13 mm are not permitted.

The maximum permissible diameter of a driven rivet and the maximum permissible diameter of threads of mechanically loaded bolts and the diameters of related boreholes are determined by the width of the angle legs and may be taken from Table 7.3.6.2.1/DE.1 as well as the edge distances.

7.3.6.2.1 **Positioning of boreholes**

7.3.6.2.1 **DE.1 Edge and borehole distances**
(ncpt) For the minimum edge distances in direction of the force see Table 7.3.6.2.1/DE.1. The minimum distances between centres of boreholes shall be not less than 2,5 times the diameter of the holes, the edge distances rectangularly to the direction of the force shall be not less than 1,2 times of the diameter of the borehole.

The minimum values of the edge distances in direction of the force specified in Table 7.3.6.2.1/DE.1 which are measured from the centre of the hole shall be adhered to in any case. For tensile loaded components of the vertical truss faces of crossarms as well as for leg member joints the higher values shall be adhered to.

Table 7.3.6.2.1/DE.1 - Dimensions of connections and edge distances of jointing components in mm

Dimension of bolt		M12	M16	M20	M24	M27	M30
Maximum diameter of borehole	Hexagon bolts:	14	18	22	26	29	32
	Rivets:	13	17	21	25	28	31
Minimum width of angle leg		35	50	60	70	75	80
Minimum edge distances in direction of the force		20	25	30	40	45	50
		25	35	40	50	55	65

7.4 **Steel poles**

7.4.1 **General**

7.4.1 **DE.1 Limit of specifications**
(ncpt) This clause applies to solid wall poles with circular or polygonal cross-sections.

7.4.4 **Serviceability limit states**

7.4.4 **DE.1 Limitation of deflection**
(ncpt) The deflection of the pole due to the load may theoretically be demonstrated following the first order theory without consideration of the movement of foundation. Slip in the joints shall be taken into account. The lateral deflection of the pole at the top shall be limited as follows:

Clause National regulation

Suspension and angle suspension poles:
4 % of the length of pole when being loaded according to loading cases A or D as defined in 4.3.10/DE.1.2 with partial factor γ_F =1.

Angle poles, section poles and terminal poles:
2,5 % of the length of poles when being loaded according to loading case D as defined in 4.3.10/DE.1.2, with partial factor γ_F =1.

Independently of the pole length the deflection of the pole top of an angle section or dead end pole under maximum load according to loading case D may not increase by more than 0,5 m compared with the situation under everyday loads (+10 °C, no wind).

7.4.5.2 **Calculation of internal forces and moments**

7.4.5.2 **DE.1 Theory of calculation**
(ncpt) The calculation of the ultimate internal forces and moments should be carried out according to the second order theory. If this proof is dispensed with the effects of second order theory shall be considered by the following additions to the moments which are determined according to the first order theory:

Suspension, angle suspension and angle poles	5 %
Section poles, angle section poles, terminal poles	3 %

This approximation applies only to poles having a length up to 40 m between the top of the foundation and the top of the uppermost crossarm.

7.4.5.4 **Resistance of cross-sections**

7.4.5.4 **DE.1 Cut outs**
(ncpt) If the effective cross-section is reduced by cut outs for doors, etc., a static analysis shall be carried out on the basis of the effectively available cross-section.

7.4.6.3 **Slip joint connections**

7.4.6.3 **DE.1 Additional requirements**
(ncpt)

Pole taper	≥ 10 mm/m
Wall thickness	≤ 16 mm

7.6 **Concrete poles**

7.6 **DE.1 Load assumptions**
(ncpt) Reinforced concrete poles and their crossarms shall be designed on the basis of the load assumptions as given in 4.3.10/DE.1.

7.6 **DE.2 Design and rating**
(ncpt) DIN EN 12843 applies for design and rating of concrete poles.

7.7 **DE.2 Stays for towers**
(ncpt) Galvanized steel ropes according to DIN 3051, Part 4, (round-shaped flexible stranded ropes with steel core only) and to DIN 48201, Part 3, shall be used as stay wires. Ropes with thickly galvanized strands should be used preferably.

Clause National regulation

Steel ropes with any other type of corrosion protection may be used if that protection is at least as effective as the specified galvanizing.

The partial factor for steel ropes is γ_M = 1,65.

The failing load of the rope provided with end fittings shall be demonstrated by tensile tests on at least one sample per rope diameter.

This requirement for tests can be disregarded,

- if the design of the rope and of the end fitting as well as the corresponding mechanical strength data can be taken from a proven standard or

- if the proof has already been carried out for comparable designs and dimensions.

Stays shall be equipped with devices for retightening. The connection of the stay ropes with the anchor device shall be accessible. The jointing elements shall be secured against unintentional loosening.

Stays for towers made of materials with insulating characteristics shall be additionally equipped beyond arms reach with an insulator designed for adequate mechanical and electrical strength (see DIN VDE 0141).

For all other towers the stays shall be bonded to the earthing system of the support.

7.8 **Other structures**

7.8 **DE.1 Minimum requirements**
(ncpt) To other tower or pole designs and to towers or poles made of other materials the same minimum requirements apply accordingly as in case of the above mentioned tower or pole types. Towers or poles made of aluminium alloys shall be designed according to the relevant standards.

7.9 **Corrosion protection and finishes**

7.9 **DE.1 Selection of the protection system**
(ncpt) The selection of the protection system shall be decided upon depending on the requirements which apply for the individual line and shall be specified in a project specification.

7.10 **Maintenance facilities**

7.10 **DE.1 Walkways for climbing and access**
(ncpt) Lattice steel towers need no special walkways for climbing and access to working positions

- if the distance between nodes at the leg member does not exceed 0,45 m or

- if the structural members of the towers which have to be used when climbing are not inclined by more than 30° and the distance between any standing position and the next structural components above does not exceed 1,7 m.

Clause National regulation

In case of lattice steel towers which do not comply with these stipulations, separate walkways shall be arranged on at least two diagonally opposite leg members of towers carrying several circuits.

These walkways may consist of:
- a ladder,
- a step bolt arrangement,
- a stirrup arrangement.

Alternatively, the separate walkways can be designed as:
- a step bolt arrangement or a ladder at tower walls perpendicularly to the line direction or
- a ladder within the tower body.

In the case of a two line step bolt arrangement the angle between the planes of the bolts shall be at least 90°.

The width of the step bolts and stirrups shall amount to at least 300 mm for single line arrangements and at least 150 mm in case of two line step bolt arrangements. Flat tread width shall be at least 20 mm, and the diameter of cylindrical treads at least 24 mm. To provide a protection against sliding a lateral stop at least 20 mm high measured from the top of step must be provided. Hexagon-head step bolts meet the requirement for an adequate lateral stop.

Normally the step bolts and stirrups should be arranged with a constant distance of ≤ 333 mm. If due to the design of the tower the distances between alternate step bolts or stirrups of an arrangement cannot be equal and/or cannot be 333 mm or less, the distance between two adjacent step bolts or stirrups may vary by up to 100 mm but the spacing between step bolts or stirrups shall not exceed 403 mm. In the vicinity of the crossarm joints structural components may be used as treads instead of step bolts or stirrups.

For rating of step bolts and stirrups see 4.3.6/DE.1

Crossarms shall each be equipped with a walkway and a handrail, unless the crossarms are designed as follows:
- the spacing between the structural members which have to be used when climbing does not exceed 0,6 m measured at a distance of 0,6 m from the lower chord and
- structural members arranged at distances between 0,7 m and 1,7 m above any standing position can be held on to continuously.

Steel poles and reinforced concrete poles do not require any walkways for climbing and access to working positions if climbing devices separated from the poles are used such as ladders or elevating platforms.

7.10.3 **Safety requirements**

7.10.3 (ncpt) **DE.1 Protection against climbing**

Protection against climbing according to 7.10.3 is ensured if the walkways, e. g. step bolt arrangements at lattice steel towers, start at least 2,20 m above ground level. Any protection of the framework against unauthorized climbing is not required in principle.

Clause National regulation

8 Foundations

8.2 General requirements

8.2 (ncpt) DE.1 General requirements

The general requirements as explained in 8.2 are achieved by designing and constructing foundations according to the following 8.4/DE.1 to 8.7/DE.3.
The foundation subface which has to transfer vertical loads to the subsoil shall be bedded at a frost-proof depth, but at least 0,8 m below ground level.

8.4 Loads acting on the foundations

8.4 (ncpt) DE.1 Basis of design

In the following the geotechnical design is based on characteristic values. Therefore, the loads resulting from the tower design as well as the dead load of the foundation itself and the dead load of the soil shall be considered with their characteristic values. The characteristic values of foundation loads resulting from exceptional loading cases J, K and L according to 4.3.10/DE.1.2 may be reduced by a factor of 0,8.

If the tower analysis had been carried out with ultimate loads only, the necessary characteristic values (E_K) of the foundation loading may be approximately derived from the design values (E_d) of the tower design as follows:

$$E_k = E_d / 1{,}35$$

The factor 0,8 for foundation loading in case of exceptional loading has been considered already thereby and must not be used anymore.

8.5.2 Geotechnical design by calculation

8.5.2 (ncpt) DE.1 Soil characteristics

If the soil investigations do not yield other values the soil characteristics according to Annex M, Tables M.2 and M.3, and Table 8.5.2/DE.1 shall be assumed when rating the foundations. Sufficient compaction of the backfill is assumed when adopting these values. Under certain circumstances a possible reduction of consistency of cohesive soils and hence a reduction of load carrying capacity has to be considered

The permissible soil pressures given in Table 8.5.2/DE.1 apply to a depth of not more than 1,5 m and to a width of the foundation base of more than 1 m. If the depth of embedment is more than 1,5 m at all sides of the foundation body the permissible soil pressure may be increased by a value which results from the surcharge of the soil associated with the additional depth multiplied by the factor κ (see Table 8.5.2/DE.1 column 6).

In case of groundwater the reduction of load carrying capacity of the foundation due to buoyancy shall be considered when analysing the foundation taking care of the most unfavourable groundwater table.

Clause National regulation

Table 8.5.2/DE.1 - Soil characteristics for design of foundation

1	2	3	4	5	6	7	8	9	10
Type of soil	Specific weight force (values for design)		Angle of internal friction	Permissible soil pressure at a depth ≤ 1,5 m	Coefficient κ	Angle of earth frustum			
						β_o			β
	naturally humid	with buoyancy				Foundation type acc. to Figure 8.5.2/DE.6.1			
						B	A	S	Monobl.
	kN/m³	kN/m³	Degree	kN/m²	-	Degree			
UNDISTURBED SOIL									
Non-cohesive soils									
Sand, loose	17	9	30	200	3,5		18 to 21	16 to 18	5 to 10
Sand, semi loose	18	10	32,5	300	4	38 to 49	20 to 23	18 to 20	5 to 10
Sand, dense	19	11	35	400	5	41 to 53	22 to 25	20 to 22	8 to 10
Gravel, bolder, uniform	17	9	35	400	5		22 to 25	20 to 22	8 to 12
Gravel-sand, graded	18	10	35	400	5	41 to 53	22 to 25	20 to 22	8 to 12
Bolder, stones, macadam, graded	18	10	35	400	6	41 to 53	22 to 25	20 to 22	8 to 12
Cohesive soils									
very soft	16	8	0	0	1		0	0	0
soft (easy to kneed), purely cohesive	18	9	15	40	2		9 to 10	6 to 8	4
soft, with non-cohesive additions	19	10	17,5	40	2,5		11 to 13	8 to 10	4
firm (difficult to kneed), purely cohesive	18	9	17,5	100	2,5	21 to 27	11 to 15	8 to 11	6
firm, with non-cohesive additions	19	10	22,5	100	3		13 to 17	10 to 13	6
stiff, purely cohesive	18	10	22,5	200	3	26 to 34	15 to 23	11 to 19	8
stiff, with non-cohesive additions	19	11	25	200	3,5	26 to 34	17 to 26	13 to 21	8
hard, purely cohesive	18		27,5	400	3,5		23 to 28	19 to 23	10
hard, with non-cohesive additions	19		30	400	4	29 to 38 32 to 42 35 to 46	26 to 28	21 to 23	10
Organic soils and soils with organic additions	5 to 16	0 to 7	15		1			0	0
Rock				independent of depth					
with considerable fissuring or unfavourable stratification	20			up to 1 000					
in sound, not-decomposed condition with minor fissuring or favourable stratification	25			up to 3 000					
MADE UP GROUND AND FILL	Depending on condition and thickness of foundation strata as well as compactness and uniformity of their stratification values defined above may be used.								
Uncompacted embankment	12 to 16	6 to 10	10 to 25	30 to 100	2			6 to 13	4 to 10
Compacted embankment	Classification according to type of soil, density of stratification and consistency, resp.								

Clause National regulation

8.5.2 **Compact foundations**

8.5.2 **DE.2 Monoblock foundations**
(ncpt) Monoblock foundations can be designed with or without a step.

8.5.2 **DE.2.1 Assumptions for design**
(ncpt) When designing monoblock foundations the loadings resulting from the tower according to 8.4/DE.1, as well as the dead load of the foundation and the vertical surcharge due to soil resting upon the foundation base shall be taken into account. Additionally, the dead load of an earth frustum, the limiting faces of which start at all sides at the lower edges of the foundation base and are inclined at an angle ß outwards from the vertical may be considered. The magnitude of the angle ß depends above all on the angle of internal friction as well as on the consistency of cohesive soils, on the compaction of soil and on the adhesion and bond between foundation block and soil (for standard values see Table 8.5.2/DE.1, column 10).

When rating monoblock foundations the lateral resistance of soil may be taken into account according to the compaction and characteristics of the soil. It is essential therefore that the soil will be neither permanently nor temporarily removed as long as the external loads apply.

8.5.2 **DE.2.2 Stability conditions**
(ncpt) The inclination of the foundation body under load shall not exceed 1 %. If the resisting moment due to lateral soil pressure exceeds the resisting moment due to the pressure in the foundation subface the theoretical proof of a stability of 1,0 will be sufficient. The decreasing proportion of the lateral soil resistance on the total carrying capacity of the foundation necessitates a progressive increase in stability requirement which must achieve 1,5 when the lateral soil resistance falls to zero.

The soil pressure shall be verified. If no other values result from the soil investigations the permissible soil pressures may be taken from Table 8.5.2/DE.1 .

8.5.2 **DE.3 Slab foundations**

8.5.2 **DE.3.1 Assumptions for design**
(ncpt) If the body of a tower or pole is supported by a foundation block formed by a slab, whereby the lateral restraint of the soil can be neglected, the tower loads according to 8.4/DE.1 as well as the dead load of the foundation block and the vertical surcharge of the soil resting upon the foundation block shall be taken into account.

8.5.2 **DE.3.2 Stability conditions**
(ncpt) The margin of stability against tilting shall be at least 1,5. This requirement is met if the gap under foundation subface does not extend beyond the centre of gravity of the base area. This condition is satisfied if the eccentricities e_x and e_y of the resulting total vertical load in the foundation subface fulfil the following conditions:

For rectangular subfaces (see Figure 8.5.2/DE3.2):

$$(e_x / b_x)^2 + (e_y / b_y)^2 \leq 1/9.$$

Clause National regulation

For circular subfaces:

$$\sqrt{(e_x^{\,2} + e_y^{\,2})} / r \leq 0{,}59$$

where r is the radius of the circular area.

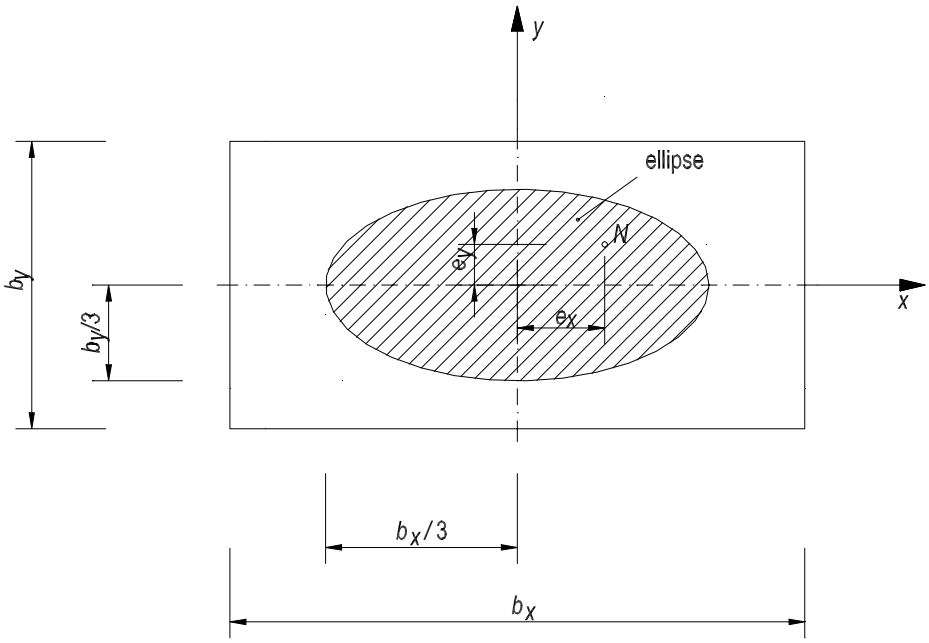

Figure 8.5.2/DE.3.2 - Permissible area of a rectangular foundation subface for the position e_x, e_y of the force N resulting from total vertical load

In addition to reliability against tilting, the soil pressure shall be proved. If the soil investigations do not provide other values the permissible soil pressure may be taken from Table 8.5.2/DE.1.

In case of rectangular slabs it shall be shown that the theoretical soil pressure

$$p = N / A \; ; \qquad \text{with} \quad A = (b_x - 2\,|e_x|)\,(b_y - 2\,|e_y|)$$

does not exceed the permissible soil pressure.

In case of circularly shaped slabs it shall be shown that the maximum theoretical soil pressure divided by the factor 1,3 does not exceed the permissible soil pressure.

8.5.2 **DE.4 Grillage-type slab foundations**

(ncpt) If a grillage-type foundation is designed such that all leg members are connected by one grillage made of sleepers the stability may be proved according to the method described before. In this case the gross area of the grillage may be taken into account if the intermediate space between the sleepers does not exceed 1/3 of the width of the sleepers.

Clause National regulation

The compaction of the backfill shall be carried out conscientiously.

Members of the tower embedded in earth and inclined by more than 15° from the vertical shall be assumed as additionally loaded by the earth resting upon them. The additional load to be assumed shall at least correspond to the load of a prismatic earth body of three times the member width and with vertical faces vertically above the member.

8.5.2 (ncpt) **DE.5 Single-pile foundations**

If the body of a pole is provided with a foundation body consisting of a single pier or pile the loads according to 8.4/DE.1, the dead load of the foundation as well as the lateral restraint of the pile according to the compactness or consistency and to the characteristics of the soil shall be taken into account when rating the foundation.

The loadings to be assumed are transferred to the subsoil essentially by lateral soil resistance. The performance of the subsoil as well as the displacement of the pile in a horizontal direction shall be considered.

The analysis of a single pile foundation may be carried out according to a qualified method.

8.5.2 **DE.6 Separate stepped block foundations**

8.5.2 (ncpt) **DE.6.1 Assumptions for design**

As far as the method of installation and the performance under loading are concerned the stepped block foundations (Figure 8.5.2/DE.6.1) are classified as:

Foundation type A: Lowermost step concreted to undisturbed subsoil.

Foundation type S: Lowermost step concreted to shuttering.

If the base slab projects on all sides by at least 0,20 m then, in addition to the dead load of the foundation block to act against the uplift force, the dead load of earth enclosed by the angle *ß* of earth frustum according to Figure 8.5.2/DE.6.1 may be taken into account.

The angle ß may be calculated according to the formula

$$ß = ß_0 \sqrt{(b/t)}$$

where:

$ß_0$ angle of earth frustum for b/t=1 according to Table 8.5.2/DE.1, columns 8 and 9.

B width of the lower most step (Figure 8.5.2/DE.6.1).

Clause National regulation

In the case of foundations with circular subface the diameter of the base shall be inserted for the width. In the case of a rectangular subface the geometric mean $b = \sqrt{(b_1\, b_2)}$ shall be assumed as theoretical width. This applies, when $b_1 / b_2 \leq 1{,}4$ where b_1 is the larger width.

t depth of earth frustum (Figure 8.5.2/DE.6.1).

The method explained above only applies to those stepped concrete foundations the ratio *b*/*t* of which is more than 0,6.

If *b*/*t* exceeds the value 1, then $ß = ß_0$ shall be assumed for calculation. The angle of earth frustum *ß* shall be limited to 35^0.

As a rule, the above mentioned value $ß_0$ applies to foundation types A and S to widths of the foundations between 1,5 m and 5,0 m. Within the ranges assigned to the individual types of soil the lower values of $ß_0$ given in Table 8.5.2/DE.1, shall be taken together with large foundation widths and the upper values $ß_0$ with small foundation widths. Values in between may be linearly interpolated.

Clause National regulation

Stepped concrete foundation type A "concreted to undisturbed soil"

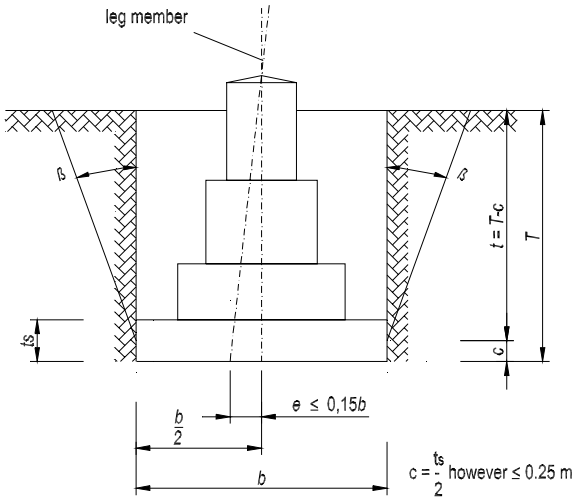

Stepped concrete foundation type S "concreted to shuttering"

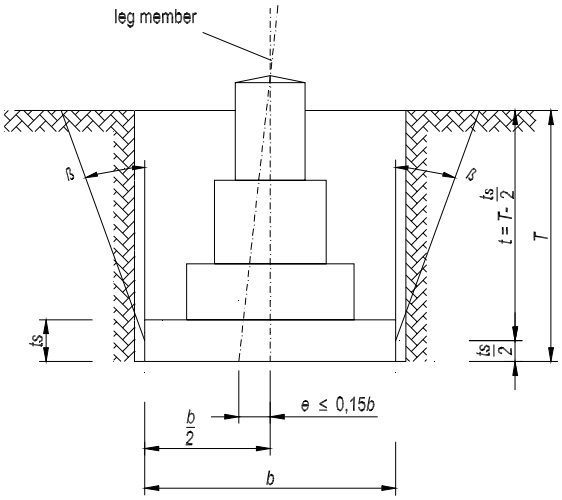

Auger-bored and excavated foundation Foundation type B

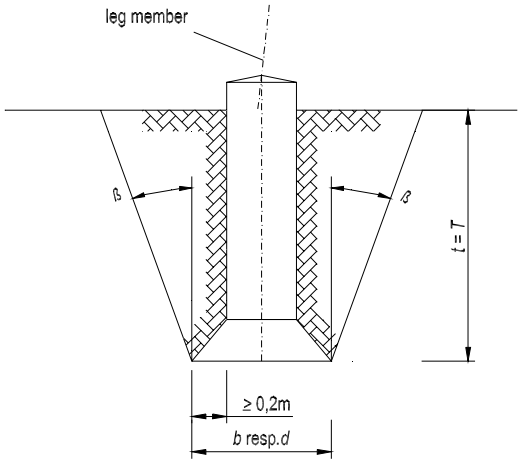

Separated grillage foundation (ß as in case of type S)

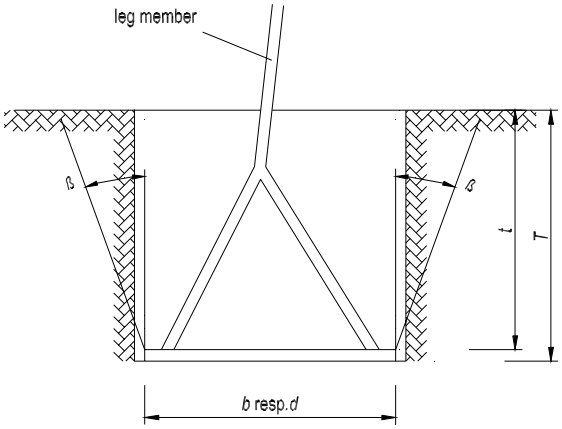

ß = angle of earth frustum as described

e = permissible eccentricity as described

natural soil

backfill

Figure 8.5.2/DE.6.1 - Assumptions for design of stepped concrete foundations, auger-bored and excavated foundations as well as separate grillage foundations

Clause National regulation

8.5.2 (ncpt) **DE.6.2 Stability conditions in case of loading by compression**

In case of stepped block foundations loaded by compression it shall be proved, that the soil pressures which are assumed to be equally distributed over the foundation subface do not exceed the permissible soil pressures according to Table 8.5.2/DE.1. The dead load of the soil resting vertically upon the foundation base shall be considered as a surcharge. The effect of a horizontal load on the soil pressure may be neglected compared with the prevailing effect of the vertical load.

8.5.2 (ncpt) **DE.6.3 Stability conditions in case of loading by uplift**

In case of stepped block foundations under an uplift load a margin of stability of 1,5 against being pulled out shall be proved.

8.5.2 (ncpt) **DE.6.4 Additional conditions**

In addition to the stipulated stability it shall be proved that the following condition is met:

For foundation type A: $G/Z > 0{,}67$,
For foundation type S: $G/Z > 0{,}80$,

where:

G dead load of the foundation block and of the soil resting vertically upon the foundation base.

Z vertical component of the uplift force acting on the foundation.

The ultimate capacity of the foundations against uplift is essentially governed by the compactness and the consistency of the surrounding subsoil. The beneficial results of an intensive artificial compaction of the surrounding subsoil (compaction by vibration process or similar methods) may be taken into account.

The virtual point of penetration of the leg member through the foundation subface may deviate from the centre of the foundation subface at maximum by the amount e specified in Figure 8.5.2/DE.6.1.

8.5.2 **DE.7 Auger-bored and excavated foundations**

8.5.2 (ncpt) **DE.7.1 Assumptions for design**

Auger-bored and excavated foundations (foundation type B according to Figure 8.5.2/DE.6.1) are column-type foundations made of reinforced concrete with an expanded base. As a rule, they do not only carry the loads and moments acting at the top of the foundation axially but also transfer the loads resulting from horizontal forces and bending moments by lateral bearing of the shaft onto the subsoil.

Clause National regulation

The angle of earth frustum ß may be evaluated using the formula

$$ß = ß_0 \sqrt{(b / t)},$$

where:

$ß_0$ angle of earth frustum for *b/t*=1 according to Table 8.5.2/DE.1, column 7.
b width of foundation (see Figure 8.5.2/DE.6.1),
t depth of foundation (see Figure 8.5.2/DE.6.1).

The angle of earth frustum β shall be limited to 35^0.

The soil characteristics may be taken from Table 8.5.2/DE.1. As a rule, the values $ß_0$ given in Table 8.5.2/DE.1, column 7, for foundation type B apply to foundation widths between 1,2 m and 2,1 m. Within the ranges mentioned for the individual types of soil the lower values of $ß_0$ apply to large foundation widths and the upper values of $ß_0$ to small foundation widths. Values in between may be interpolated linearly.

In case of auger-bored and excavated foundations the transfer of the horizontal forces to the subsoil (lateral bearing), as well as the bending loading have be proved by an accepted method.

8.5.2 (ncpt) **DE.7.2 Stability conditions in case of loading by compression**

In case of foundations loaded by compression it shall be proved that the soil pressures, which may be assumed to be equally distributed within the foundation subface, do not exceed the permissible soil pressures according to Table 8.5.2/DE.1. The dead load of the foundation body as well as the dead load of the soil resting vertically upon the foundation subface may be neglected when calculating the soil pressure.

8.5.2 (ncpt) **DE.7.3 Stability conditions in case of loading by uplift**

In case of foundations loaded by uplift a stability of 1,5 against being pulled out shall be proved The analytical proof of stability may be carried out using the earth frustum method. Thereby, additionally to the load of the foundation body counteracting the uplift, the dead load of a soil body formed by an angle of frustum ß applied to the edge of the foundation subface may be taken into consideration (see Figure 8.5.2/DE.6.1).

8.5.2 (ncpt) **DE.7.4 Additional conditions**

The formula for the determination of the angle of earth frustum ß is validated for foundations with dimensions complying with the following boundary conditions:

- Depth of foundation between 1,8 and 7,0 m.
- Diameter of concrete shaft between 0,7 and 1,5 m.
- Width of foundation between 1,2 and 2,1 m.
- Projection of foundation subface $\geq$ 0,2 m.
- Ratio of foundation width to foundation depth $0{,}25 \leq b/t \leq 0{,}7$.

With regard to construction the ratio of the projection of foundation subface to the height of the foundation base should be about 0,5 in case of cohesive soils, and about 0,33 in case of non-cohesive soils.

Clause National regulation

8.5.2 (ncpt) **DE.8 Separate grillage foundations**

The verification of stability of the separate grillage foundations may be carried out using the earth frustum method according to 8.5.2/DE.6.1. The angle of earth frustum complies with that of stepped block foundations, with the lowermost step concreted to shuttering (Type S, Figure 8.5.2/DE.6.1).

In case of loading by uplift a margin of stability of 1,8 against being pulled out shall be proved.

In case of loading by compression a proof according to that stipulated for stepped block foundations shall be carried out (see 8.5.2/DE.6.2). The total area of the foundation subface may be taken into account, if the spacing between the individual sleepers does not exceed 1/3 of the width of the sleepers. The compaction of the backfill must be carried out conscientiously.

8.5.2/DE.4 applies to the rating of tower members embedded in the subsoil.

8.5.2 (ncpt) **DE.9 Pile foundations**

As a rule, pile foundations shall be designed such that the loadings resulting from the towers are exclusively transferred to the subsoil by the piles.

Significant horizontal components of loads may be counteracted by a bending resistant design of the piles in addition to battered arrangement of piles (raked piles, pile groups).

Foundation piles should be loaded essentially in direction of their axes. The transfer of the loading from the structure into the piles shall be proved. Floating-pile foundations should be avoided as far as possible. They may be adopted if the resilient layers at increasing depths are progressively more solid i.e. less compressible, so that lesser settlements would occur than in the case of a wide shallow foundation.

Within a separated pile foundation, for the same static function (for example, transfer of uplift or compression forces) piles shall be used which by their method of installation, their arrangement and their materials provide approximately the same performance in respect of deformation and settlement.

If over an extended area a wide-spread loading (for example due to a fill) acts upon a soft layer of soil above good bearing subsoil in the vicinity of a pile foundation, horizontal movements of the soft soil can occur. The piles will then be additionally loaded by bending.

The external pile loads result from the loads acting on the towers. When rating the piles the effects of buoyancy and other effects which reduce the stability shall be considered. In case of foundations loaded by compression the releasing effect of buoyancy may not be taken into account.

The piles shall be installed with a minimum length of 6 m and shall be embedded at least 3 m into the good bearing soil unless their stability is demonstrated by loading tests.

Clause National regulation

Parallel as well as raked piles shall be provided with sufficient spacing between their axes such that neither during installation nor after loading adverse reactions can occur on adjacent piles. This requirement is met if the distance of the pile axes at the pile end in the soil reaches at least three times the maximum cross-sectional dimension of the pile.

The strength capacity of a pile depends on the structure of the subsoil and its properties, on the ground-water conditions, on the depth of penetration into bearing soil layers and on their thickness, on the shape of the pile and its cross-sectional area, on the material of the pile, on the nature of the circumferencial surface and on design of the pile point, on the arrangement of the pile and on the distance of piles as well as on the installation procedure. Additionally, the thickness and the strength of overburden soil layers are significant. Moreover, the effects of ageing, of negative skin friction and of superimposed lateral loading shall be considered.

The strength capacity of driven piles the skin friction of which provides an essential portion of their total capacity may even increase over longer periods after driving especially in fine-sandy, silty and clayey soils.

A compression pile may be loaded additionally by negative skin friction if the upper layers of soil settle. The effect of negative skin friction on the structure can be reduced by a suitable design of piles and by choice of larger spacing between piles. In case of uplift loaded piles the releasing effect may not be considered.

The strength capacity of pile groups may be determined by summation of the strength capacities of the individual piles.

The theoretical determination of the ultimate tensile load of piles may be carried out by means of skin friction. The values of skin friction must be deduced for the given soil conditions and the selected type of pile based on experience with the particular type of soil. As an approximation, in case of layers of soil with varying skin friction, the friction forces may be determined separately for each individual layer and the ultimate tensile load may be calculated by summation of the individual values. For this, the thicknesses of the layers and sequence of layers as well as the ground-water table shall be considered.

Since for piles a wide scatter of the values of skin friction has to be expected the theoretical proof of stability of a pile under uplift loading shall be carried out for a stability margin of 2,0. When carrying out the proof by loading tests according to 8.6/DE.1 a stability margin of 1,5 will be sufficient.

When rating compression-loaded piles at least those values of skin friction adopted for uplift-loaded piles and the resistance of the pile point may be taken into consideration. A stability margin of 1,5 should apply.

The buckling stability of free-standing piles shall be analysed considering the buckling length and the restraining conditions. Piles embedded in soil are not prone to buckling even in very soft layers of soil.

Clause National regulation

8.6 **Loading tests**

8.6 (ncpt) **DE.1 Proof tests**

Proof tests are typically carried out on production foundations up to a certain percentage (typically 125 %) of the characteristic load E_k according to 8.4/DE.1. After being successfully tested the foundation shall be fully serviceable.

8.7 **Structural design**

8.7 (ncpt) **DE.1 Structural design**

The structural design of the foundation body is based on ultimate loads. Therefore, the design values of the foundation loading resulting from the tower analysis form the basis of design and not the characteristic values used for the geotechnical design according to 8.4/DE.1.

As an approximation and following DIN 1054:2003-01 the internal forces and moments may be calculated at first for the characteristic foundation loads and then be multiplied by the factor 1,35 to establish the ultimate design level for the civil engineering design. This is of special importance for concrete slab foundations.

8.7 **DE.2 Concrete foundations**

8.7 (ncpt) **DE.2.1 Rating**

The rating and the calculation of forces and bending moments and the installation of foundation blocks shall be carried out according to DIN 1045-1:2001-07 if not stipulated otherwise in the following clauses. The concrete used for foundations shall have a compressive strength according to at least C20/25.

In case of stepped foundations made of non-reinforced concrete the ratio n of the height of steps to the width of the projection shall be at minimum 1,0. Overhang with ratio $n < 1{,}4$ shall be reinforced and checked.

8.7 (ncpt) **DE.2.2 Embedment of steel members into the concrete by means of anchoring elements**

If the total tensile or compression load of steel members anchored in concrete is transferred to the concrete by anchor cleats, anchor plates, lugs or the like then it shall be proved that the compression stresses between the anchoring elements and the concrete do not exceed the values given in Table 8.7/DE.2.2, and the shearing stress in the contour surface of the anchoring elements does not exceed the values in Table 8.7/DE.2.2. If these values are exceeded the resistance against splitting tensile forces shall be proved.

The shortest envelope of the anchoring elements shall be assumed for the contour surface.

An embedment of structural steel elements without anchoring elements is not permitted.

Structural steel elements within the concrete shall be rated in accordance with DIN V ENV 1993-1-1. The bending stresses of the welding seams of cleats and anchoring angle sections need not to be demonstrated.

Clause National regulation

Table 8.7/DE2.2 - Ultimate values for shearing and compressive stress in case of anchoring of steel members in concrete

Strength quality class of concrete	Shearing stress MN/m^2	Compression stress MN/m^2
C 20/25	2,6	14,0
C 25/30	2,7	17,5
C 30/37	3,4	21,0

8.7 (ncpt) **DE.3 Pile foundations**

The structural design of piles depends essentially on the pile types. Piles are loaded by axial and shear forces and by bending. The maximum combined loads have to be determined accordingly and the cross-sections must be proved by adoption of relevant standards (ENV 1992-3 and ENV 1993-1-1).

9 Conductors

9 (ncpt) **DE.1 Dimensions and materials**

For the dimensions and materials of conductors made from aluminium, aluminium alloys, copper, copper alloys, steel, aluminium-clad steel wires the following standards apply:

EN 50182	Stranded conductors for overhead power lines
EN 50183	Aluminium alloy wires for conductors of overhead power lines
EN 50189	Zinc-clad steel wires for conductors of overhead power lines
EN 60889	Hard-drawn aluminium wires
EN 61232	Aluminium-clad steel wires for electrical engineering
DIN 48201-1	Stranded copper conductors
DIN 48201-2	Stranded conductors made of wrought copper alloys
DIN 48201-3	Steel stranded conductors

If materials are used the mechanical and electrical characteristics of which deviate from those specified in standards mentioned above, their characteristics and their suitability for the individual case of application shall be proved.

If conductors are produced having a composition or dimensions not specified in the standards mentioned above but use materials specified in the standards mentioned then no verification of the material suitability is required.

9 (ncpt) **DE.2 Mechanical characteristics**

Composition, mechanical characteristics, permissible everyday stress and long-term stress for standard conductors are specified in Table 9/DE.2.

Reference is made to the definitions concerning conductors given in 2.1/DE.5.

Clause National regulation

Table 9/DE.2 - Composition, mechanical characteristics and permissible everyday stress for standard conductors according to DIN 48201 and EN 50182

1		2	3	4	5	
Conductor type and standard	Cross sectional ratio	Stranding	Coefficient of thermal expansion ε_t (10^{-6}/K)	Effective modulus of elasticity E kN/mm²	Limits for everyday stress N/mm²	
AL1/ST1A acc. to EN 50182 and AL3/ST1A (Aldrey/Steel) acc. to EN 50182, respectively	1,4:1	14/7	15,0	110	AL1/ ST1A	AL3/ ST1A
		14/19			90	104
	1,7:1	12/7	15,3	107	84	102
	4,3:1	30/7	17,8	82	57	69
	6,0:1	6/1	19,2	81	56	67
		26/7	18,9	77		
	7,7:1	24/7	19,6	74		
		54/7	19,3	70	52	63
		54/19	19,4	68		
	11,3:1	48/7	20,5	62	44	53
	14,5:1	45/7	20,9	61	40	50
	23,1:1	72/7	21,7	60	35	
AL1 acc. to EN 50182		7	23,0	60	30	
		19				
		37		57		
		61				
		91		55		
AL3 (Aldrey) acc. to EN 50182		7	23,0	60	44	
		19				
		37		57		
		61				
		91		55		
Copper acc. to DIN 48201, Part 1		7		113	85	
		19		105		
		37				
		61		100		
Copper wrought alloy (Bronze I ...Bronze III) acc. to DIN 48201 Part 2		7	17,0	113	100	
		19		105		
		37				
		61		100		
ST1A and ST4A acc. to DIN 48201 Part 3		7	11,0	180	ST1A 130 ST4A 150	
		19		175		
A20SA acc. to EN 50182		7	13,0	159	137	
		19				
		37				
		61		157		

NOTE 264-AL1/34-ST1A corresponds to Al/St 265/35
264-AL3/34-ST1A corresponds to E-AlMgSi/St 265/35
117-AL3 corresponds to E-AlMgSi 120

Clause National regulation

9 **DE.3 Thermal rating**

(ncpt) Material and cross-section of a conductor shall be selected such that the conductor will not reach a temperature which would lead to an inadmissible reduction of its mechanical strength while being subjected to the maximum electrical load current taking account of ambient conditions or of the maximum short-circuit load condition to be expected. The permissible conductor temperatures are 80 °C for AL1/ST1A, AL3/ST1A, AL1, AL3 and 70 °C for copper conductors. The temperatures permissible in case of high-temperature resistant materials may be established accordingly.

The standards of the series DIN 48201-1, DIN 48201-2, DIN 48201-3 and EN 50182 contain data for the current-carrying capacity of standardized conductors.

DIN EN 60865-1 applies to the mechanical and thermal short-circuit strength. Departing from this specification the conductor temperatures shall be limited to the values given in Table 9/DE.3.

Table 9/DE.3 - Permissible conductor temperature in case of short-circuit loading

Type of conductor	Material	Permissible conductor temperature at short circuit °C
Homogeneous conductors	Copper	170
	AL1	130
	AL3	160
	ST1A	200
Reinforced conductors	AL1/ST1A	160
	AL3/ST1A	160

9 **DE.4 Loading according to long-term tensile stress**

(ncpt) At a temperature of –20 °C without ice loads or
at a temperature of –5 °C and ice load according to 4.3.3/DE.1 or
at a temperature of –5 °C with the ice load combined with wind load according to 4.3.4/DE.1 or
at a temperature of +5 °C with wind load according to 4.3.2/DE.1
the conductor tensile stress multiplied by the partial factor γ_C = 1,35 shall not exceed the failing stress of the conductor divided by the partial factor γ_M = 1,25

9 **DE.5 Loading according to everyday stress**

(ncpt) At the annual mean temperature, which can be assumed to be +10 °C normally, the horizontal component of the conductor tensile stress without wind load should not exceed the everyday stress according to Table 9/DE.2, column 5.

Depending on the design of the suspension fittings and on the efficiency of the vibration protection the horizontal component of the conductor tensile stress may exceed the values given in Table 9/DE.2, column 5 by up to 25 %.

In case of self-supporting metal-reinforced telecommunication aerial cables the everyday stress shall be chosen in relation to Table 9/DE.2, column 5, depending on material and design of the supporting reinforcement.

Clause National regulation

9 **DE.6 Loading according to ultimate stress**

At –20 °C without ice load or
at –5 °C and ice load according 4.3.3/DE.1 or
at +5 °C with wind load according 4.3.2/DE.1
the horizontal component of the conductor stress shall not exceed a limit value which has to be specified in accordance with the static rating of supports according to Clause 4.

9 (ncpt) **DE.7 Stress due to aeolian vibration**

Conductors are excited to vibration by laminar wind flows which may lead to damage by failures of individual strands and, eventually, of the whole conductor. Occurrence and intensity of the vibration to be expected depend on the material, design and cross-section of the conductor, on the magnitude of the everyday stress, on the local wind and terrain conditions, on the design of the suspension arrangements and on the fittings used as well as on the span length and on the height of the conductors above ground level.

When selecting the everyday stress according to Table 9/DE.2, there will be only a minor probability of vibration failure of reinforced conductors made of aluminium and steel as well as in case of homogeneous conductors made of copper, of steel, of copper-wrought alloys or of aluminium-clad steel, assuming favourable environmental conditions and a suitable design of the suspension arrangements. In case of lines susceptible to vibration, possible damage can be effectively counteracted by provision of vibration protection fittings.

Conductors with a small proportion of steel, homogeneous conductors made of aluminium or aluminium alloy and reinforced conductors made of aluminium alloy and steel, conductors with diameters larger than 25 mm as well as conductors in spans longer than 500 m are more susceptible to vibration.

If an increased susceptibility to vibration has to be assumed or has been observed, the design of the suspension set and of the damping devices shall be suitably selected in order to guarantee an effective protection of the conductors.

9 (snc) **DE.8 Maximum sag**

Maximum sag is assumed as the greater of the values resulting from

- a conductor temperature of -5 °C with ice load according to 4.3.3/DE.1 see also 5.4.2.2/DE.1 or
- the maximum design temperature of the conductor without ice load.

9 (ncpt) **DE.9 Provisions to take into account the conductor creep**

During their life the conductor will suffer permanent elongation (creep) resulting in an increase of the sag. At no time shall this increase of sag cause the clearances to fall below the specified values. Corresponding provisions shall be made during planning and construction of a line.

Clause National regulation

10 Insulators

10.7 Mechanical requirements

10.7 (ncpt) DE.1 Mechanical rating

The mechanical loading of the insulators shall be determined by dividing of the action on the individual insulator string.

In case of tension insulator sets the conductor tensile force at

- -20 °C without ice load,
- -5 °C and ice load according to 4.3.3/DE.1,
- -5 °C and ice load combined with wind action according to 4.3.4/DE.1 or
- +5 °C and wind load according to 4.3.2/DE.1.

shall be assumed as the maximum loading.

For suspension insulator sets and line post insulators the maximum loading shall be assumed as the resultant loading from

- conductor dead weight, ice load, simultaneous wind action and the resultant from the horizontal conductor tensile forces, if any, or

- conductor dead weight, wind action and the resultant from the conductor horizontal tensile forces, if any, or

- conductor dead weight, ice load and unbalanced force of the conductor horizontal tensile forces in case of exceptional loading.

The design load is

$$E_d = f\{\gamma_G G_K;\ \gamma_W Q_{WK};\ \gamma_I Q_{IK};\ \gamma_C Q_C\}$$

where

E_d	total loading,
G_K	permanent loads according to 4.3.1/DE.1,
Q_{WK}, Q_{IK}	variable loads according to 4.3.2/DE.1 to 4.3.4/DE.1,
Q_C	conductor horizontal tensile forces,
γ_G; γ_W; γ_I; γ_C	partial factors. These factors shall be assumed as 1,35 uniformly.

For mechanical rating the material partial factors given in Table 10.7/DE.1 shall be obeyed.

Clause National regulation

Table 10.7/DE.1 - Material partial factors for insulators, related to failure load

Type of insulator	Material partial factor γ_M
Cap and pin insulators	2,3
Long-rod insulators	2,3
Composite plastic insulators	2,3
Line post insulators	2,3

10.7 (ncpt) **DE.2 Line post insulators**

Line post insulators may only be used at suspension poles or at angle suspension poles, however, not at section or tension poles.

10.7 (ncpt) **DE.3 Multiple insulator sets**

Multiple insulator sets comprise two or more insulator strings. The permissible loading of an insulator set comprising n strings may be taken at maximum as n-times the permissible loading of an individual insulator string.
It is assumed that the total load of a multiple insulator set is as far as possible equally distributed over the individual insulator strings**.**

In case of failure of an insulator string
- a distribution of the total load as equally as possible over the remaining insulator strings shall be guaranteed
- the partial factor for materials according to Table 10.7/DE.1 for the remaining tension loaded insulators may be reduced to 1,15.
- any expected dynamic forces and bending moments shall be duly counteracted, to avoid failure of the remaining strings.

Loads according to load case L of 4.3.1/DE.1.2 shall be assumed in this case.

10.9 **Material selection and specification**

10.9 (ncpt) **DE.1 Materials and design**

Materials and design of insulators shall be selected such that they withstand atmospheric effects. In case of non-standard insulators their properties and their suitability for a given application shall be approved individually.

11 Conductor accessories - overhead line fittings

11.2 **Electrical requirements**

11.2 (ncpt) **DE.1 Conductor accessories**

Conductor accessories shall be selected in such a manner that they do not reach higher temperatures than the conductors themselves when the maximum permissible electrical load current flows and that the temperature rise do not lead to an inadmissible reduction of mechanical strength when subjected to maximum expected short-circuit loads.

Clause National regulation

11.2 **DE.2 Accessories for insulator sets**
(ncpt) Accessories for insulator sets and for other conductor attachments shall withstand the expected short-circuit load. Under the maximum expected short-circuit load they shall not reach a temperature which would lead to an inadmissible reduction of their mechanical strength.

For the rating of

- tensile-loaded accessories a current density of 70 A/mm^2 and
- non-tensile-loaded accessories a current density of 80 A/mm^2 apply.

11.6 **Mechanical rating**

11.6 **DE.1 Mechanical requirements**
(ncpt) The mechanical loading of conductor accessories follow from 9/DE.4 and from the related partial γ_c = 1,25.
The mechanical loading of the fittings for insulator sets follow from 10.7/DE.1 and from the related partial factor γ_c = 1,35.
The material partial factors are given in Table 11.6/DE.1.

11.6 **DE.2 Protective fittings**
(ncpt) Mechanical loading of protective fittings is not permitted.

11.6 **DE.3 Attachment of conductors at insulator sets and line post insulators**
(ncpt) Dead end clamps shall sustain the conductor with 1,35 times the tensile force at maximum load according to Clause 9/DE.4 or with 85 % of the conductor failing load, which ever be the lower value.
Suspension clamps shall be rated for 1,35 times the forces acting on the conductor according to 10.7/DE.1.
Additionally the suspension clamps shall reliably sustain the conductors in case of unbalanced tensile forces according to 4.3.10/DE.1.2. This does not apply to suspension release clamps which are designed to enable the conductor to slip.

Clause National regulation

Table 11.6/DE.1 - Material partial factors for accessories of insulator sets and other conductor attachments

Material (failure limits)	Material partial factor γ_M
Structural steel acc. to DIN EN 10025, heat-treatable steel acc. to DIN EN 10025, cast steel acc. to DIN 1681	2,4
Malleable cast iron acc. to DIN EN 1562	3,0
Spheroidal graphite cast iron acc. to DIN EN 1563	3,0
Aluminium wrought alloy acc. to DIN EN 573-4	2,4
Aluminium casting alloy acc. to DIN EN 1706	3,3
Copper-tin and copper-tin-zinc alloys acc. to DIN EN 1982	3,0
Copper wrought alloys low-alloyed acc. to DIN 17666	2,4
Copper-aluminium casting alloys acc. to DIN EN 1982 with δ_5 at least 12 %	2,4

11.6 (ncpt) **DE.4 Conductor joints**

Conductor joints loaded by tensile forces shall sustain the conductor with 1,35 times the tensile force at maximum load according to 9/DE.4 or with 85 % of the conductor failing load, which ever be the lower value. The forces result from the stipulations given in Clause 9/DE.4.

Accessories for conductors shall comply with the requirements according to DIN EN 61284, DIN EN 61897 and/or DIN EN 61854.

11.6 (ncpt) **DE.5 Accessories for insulators sets**

Accessories for multiple insulator sets shall as far as possible guarantee an equal distribution of forces on the individual insulator strings.

In case of failure of an insulator string of a multiple insulator set

- the partial factor for materials according to Table 11.6/DE.1 may be reduced by half for the accessories of remaining insulator strings

- an equal distribution of the total load over the remaining insulator strings shall be guaranteed as far as possible.

Clause National regulation

11.6 **DE.6 Materials, design and testing**
(ncpt) Accessories for conductors and for insulator sets shall comply with the requirements according to DIN EN 61284, DIN EN 61897 and/or DIN EN 61854.

11.6 **DE.7 Turnbuckles**
(ncpt) Turnbuckles shall not be loaded in bending.

When loaded by a conductor tensile force corresponding to the everyday stress as defined in Clause 9/DE.5 the permissible working forces according to DIN 48334 may not be exceeded. In case of maximum loads according to 10.7/DE.1 the design load of the conductor or insulator shall not exceed the failing loads of the turnbuckles according to DIN 48334 divided by the partial factor γ_M = 2,4.

The working forces may be taken as the conductor tensile forces according to Clause 9/DE.4, however without any partial factors.

12 Quality assurance, checks and taking-over

Part 1 applies without amendments.

Clause National regulation

Annex J Lattice steel towers
(normative)

J.3.2 **Net cross-sectional area**

J.3.2(2) **DE.1 Determination of net cross section**
(ncpt) The net cross section of an angle section or a cross-sectional part under tensile load is the smallest value which results from checking of potential lines of breaking and is calculated from:

$$A_{net} = A - \Delta A,$$

where

A_{net} net cross-sectional area
A gross cross section along the breaking line
ΔA sum of all hole areas along the breaking line checked.

J.4.1 **Tensile force**

J.4.1 **DE.1 Rating of members under tensile forces**
(ncpt) The design tension resistance of angle sections calculated according to J.4.1 shall be reduced by 10 %.

J.5.1 **Compression members**

J.5.1 **DE.1 Rating of members under compression forces**
(ncpt) In J.5.1.1 two alternatives for the design are given:

- by calculation only (without loading tests)
- by calculation validated by full-scale loading tests

In Germany the design formulae for the first alternative („by calculation only“) shall be used even if loading tests are carried out.

Loading tests are valid only for the tested individual tower type and its particular extension. An assignment of the test results to other tower types within the tower family or to other extensions of the tower type is not permitted.

J.5.1.2 **Flexural torsional buckling**

J.5.1.2 **DE.1 Torsional buckling**
(ncpt) For cruciform angle sections according to Figure J.8, torsional buckling shall be verified whereby the slenderness ratio may be calculated approximately using the formula

$$\bar{\lambda} = 1{,}61 \sqrt{\frac{I_P}{I_T} \frac{f_y}{E} \frac{A_{eff}}{A}},$$

where
- I_P is the polar moment of inertia,
- I_T is the torsional moment of inertia.

Clause National regulation

J.6 Buckling length of members

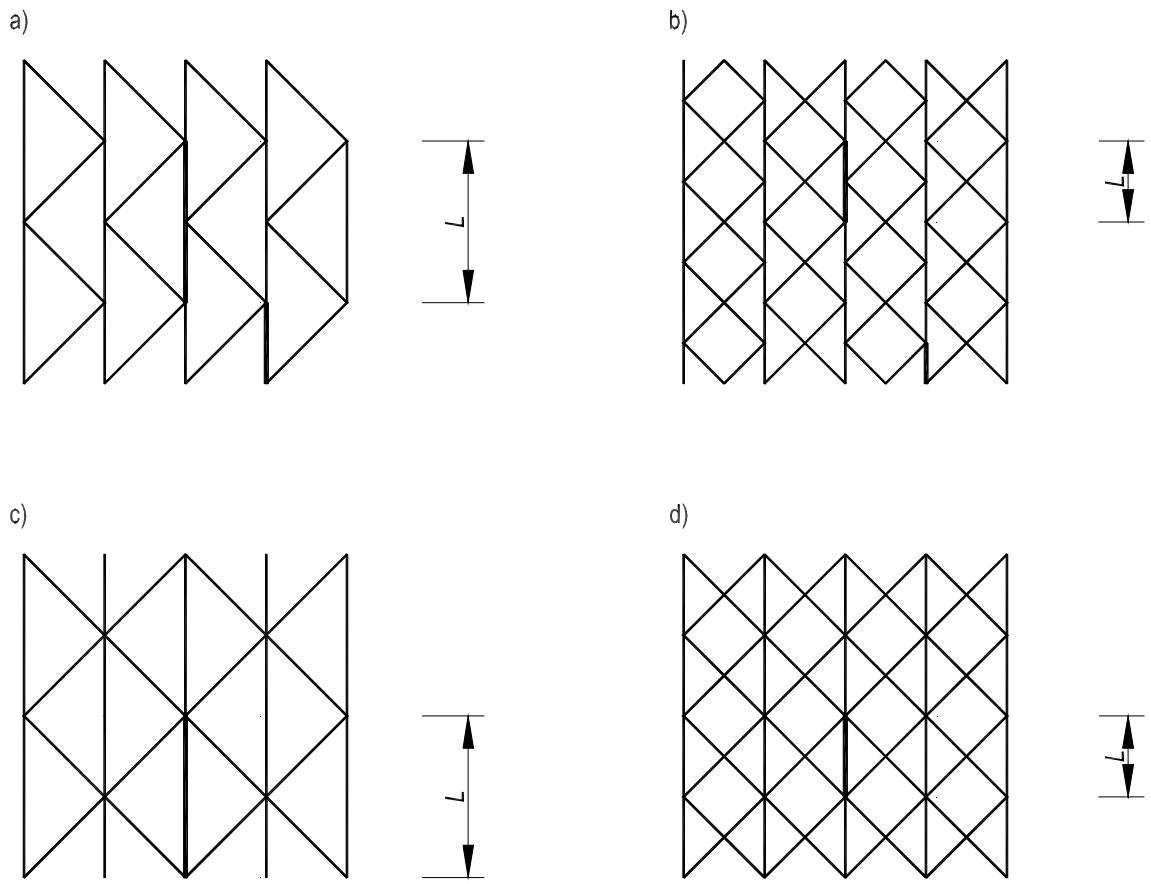

Figure J.6.2/DE.1 - Buckling length of leg members

Case a) and b): $\lambda = L/i_{yy}$ or $\lambda = 1{,}1\ L/i_{yy}$ according to J.6.2/DE.1
Case c) and d): $\lambda = L/i_{vv}$

J.6.2 Leg members and chords

J.6.2 DE.1 Buckling length and slenderness ratio of leg members

(ncpt) If the bracing is arranged in stagger according in Figure J.6.2/DE.1, a) or b), the buckling length may be assumed as the geometric member length L if the slenderness ratio $\lambda = L/i_{yy}$ does not exceed 80. If $\lambda > 80$ the buckling length may only be as 1,0 times the member length L if the member forces increase from top to bottom of the tower and the member length in the upper part of the tower or tower section are not longer than in the lower parts. If these conditions are not complied with in the case of $\lambda > 80$ than the buckling length has to be assumed as 1,1 times the length L and, therefore, the slenderness ratio will be $\lambda = 1{,}1\ L/i_{yy}$.

If the bracing is arranged without a stagger according to Figure J.6.2/DE.1, c) or d), the buckling length is equal to the geometric length of the member L and the slenderness ratio is $\lambda = L/i_{vv}$.

In case of the lower cords of crossarms a corresponding procedure shall be assumed.

Clause National regulation

J.6.3.2 **Single lattice**

J.6.3.2 (ncpt) **DE.1 Reference**
The stipulations are identical with those given in the following J.6.3.3/DE.1.

J.6.3.3 **Cross bracing**

J.6.3.3 (ncpt) **DE.1 „Boxed values“ used in the λ-formulae**
In case of single warren or double warren bracing the „boxed values“ in the λ-formulae are 0,9, if

- their ends are fixed in each direction and
- they are sufficiently restrained in direction of buckling and
- their cross-sectional area is smaller than that of the leg members.

Sufficient restraining is provided for example if the leg and bracing members consist of angle sections.

J.6.3.4 **Cross bracing with redundant members**

J.6.3.4 (ncpt) **DE.1 „Boxed values“ used in the λ-formula**
For cross bracing members the „boxed value“ used in the λ-formulae may be assumed to be 0,9 for buckling rectangularly to the plane of the face, if

- the requirements of J.6.3.3/DE.1 are complied with;
- the redundant members support the member at least at its third points;
- the crossing point is restrained by a reinforcing panel not arranged in the plane of the face.

Unless these conditions are met the „boxed value“ is set to 1.

J.6.3.8 **K-bracing**

J.6.3.8 (ncpt) the **DE.1 K-bracing without redundant members**
In this case the „boxed value“ used in the λ_1-formula may be assumed to be 0,9 if requirements of J.6.3.3/DE.1 are complied with.

J.6.3.8 (ncpt) **DE.2 K-bracing with redundant members**
In this case the „boxed value“ used in the λ_2-formula for buckling rectangularly to the plane of the face may be assumed to be 0,9, if

- the requirements of J.6.3.3/DE.1 are complied with;
- the redundant members support the member at least at its third points;
- the crossing point is restrained by a reinforcing panel not arranged in the plane of the face.

Unless these conditions are met the „boxed value“ is set to 1.

J.6.4.3 **Design**

J.6.4.3 (ncpt) **DE.1 Distance between batten plates**
In case of arrangements of batten plates according to the lower picture in Figure J.8(b) the value c shown there may be halved.

Clause	National regulation
J.10	**Secondary (redundant) members**
J.10.1 (ncpt)	**DE.1 Hypothetical force** The value K for determination of the hypothetical force shall be assumed as equal to 2.
J.11	**Bolted connections**
J.11	**DE.1 Bearing capacity** The bearing capacity $F_{b,\,Rd}$ calculated in accordance with Table J.2 shall be reduced by the factor 0,80.

National Normative Aspects (NNA)

for

FINLAND

based on EN 50341-1:2001

Version circulated with corrigendum April 2006.

Contents

Page

Foreword ... 4
1 Scope ... 5
2 Definitions, symbols and references ... 5
2.3 References ... 5
3 Basis of design ... 6
3.2.2 Reliability of overhead lines ... 6
3.2.5 Coordination of strength ... 6
4 Actions on lines ... 7
4.2.2.1 Wind speeds ... 7
4.2.2.4.1 Wind forces on conductors ... 7
4.2.2.4.2 Wind forces on insulator sets ... 8
4.2.2.4.3 Wind forces on lattice towers ... 8
4.2.3 Ice loads ... 8
4.2.5 Temperature effects ... 9
4.2.7 Security loads ... 9
4.2.10 Load cases ... 10
4.2.10.1 General ... 10
4.2.10.2 Standard load cases ... 11
4.2.11 Partial factors for actions ... 12
5 Electrical requirements ... 13
5.4.2.1 General considerations and underlying principles ... 13
5.4.2.2 Load cases for calculation of clearances ... 13
5.4.3 Clearances within the span and at the tower ... 14
5.4.4 Clearances to ground in areas remote from buildings, roads etc. ... 15
5.4.5.2 Residential and other buildings ... 15
5.4.5.3 Traffic routes ... 16
5.4.5.4 Other power lines or overhead telecommunication lines ... 17
6 Earthing systems ... 19
6.2.4.2 Measures for the observance of permissible touch voltages ... 19
7 Supports ... 20
7.5 Timber poles ... 20
7.5.3 Materials ... 20
7.5.5.3 Resistance of members ... 20
7.7 Guyed structures ... 20
7.7.5.1 Basis ... 20
7.7.5.3 Second order analysis ... 21
7.7.6 Design details for guys ... 21
8 Foundations ... 22
8.5.1 General ... 22
8.5.2 Geotechnical design by calculation ... 23
8.7 Structural design ... 24
8.8 Construction and installation ... 24

9 Conductors and overhead earthwires with or without telecommunication circuits 24
9.1 Introduction 24
9.6.2 Partial factor for conductors 25
10 Insulators 25
10.2 Standard electrical requirements 25
10.11 Type test requirements 26
11 Line equipment - Overhead line fittings 26
11.6 Mechanical requirements 26
11.8 Material selection and specification 26
11.15 Other components and equipment 26
Annex J Lattice steel towers 27
J.6 Buckling length of members 27

Foreword

1 The Finnish National Committee (NC) is identified by the following address:

SESKO Standardization in Finland
Standardization committee SK11, High Voltage Overhead Lines
P.O. Box 134, 00211 Helsinki, Finland
Tel. +358-9-696391
Fax. +358-9-677059
Email info@sesko.fi

2 The Finnish NC has prepared this NNA (part 3-7 of EN 50341and part 3-7 of EN 50423) listing the Finnish national normative aspects, under its sole responsibility, and duly passed it through the CENELEC and CLC/TC 11 procedures.

NOTE: The Finnish NC also takes sole responsibility for the technically correct co-ordination of this EN 50341-3-7 with EN 50341-1. It has performed the necessary checks in the frame of quality assurance/control. However, it is noted that this quality control has been made in the framework of the general responsibility of a standards committee under the national laws/regulations.

3 This EN 50341-3-7 is normative in Finland and informative for other countries.

4 This document has to be read in conjunction with EN 50341-1 and EN 50423-1. All clause numbers used in this Part 3-7 correspond to those of EN 50341-1 and EN 50423-1. Specific subclauses, which are prefixed "FI", are to be read as amendments to the relevant text in EN 50341-1 and EN 50423-1. Any necessary clarification regarding the application of this combined NNA in conjunction with EN 50341-1 and EN 50423-1 shall be referred to the Finnish NC who will, in co-operation with CLC/TC 11 clarify the requirements.

When no reference is made in this combined NNA to a specific subclause, then Part 1 applies.

5 In the case of "boxed values" defined in EN 50341-1/EN 50423-1, amended values (if any), which are defined in this NNA shall be taken into account in Finland.

However, any boxed value, whether in EN 50341-1/EN 50423-1 or this NNA, shall not be amended in the direction of greater risk in a Project Specification.

6 The Finnish NC declares in accordance with subclause 3.1 of EN 50341-1/EN 50423-1 that this NNA follows the "General Approach" (4.2) and consequently subclause 4.3 "Empirical Approach" is not applicable for Finland.

7 The national Finnish standards/regulations related to overhead electrical lines exceeding 1 kV (AC) are listed in 2.3/FI.1-3.

NOTE All national standards referred to in this NNA will be replaced by the relevant European Standards as soon as they become available and are declared by the Finnish NC to be applicable and thus reported to the secretary of CLC/TC 11.

1 Scope

(ncpt) **FI.1 Application to existing overhead lines**

This Part 3-7 is applicable for new high voltage overhead transmission lines only, not for existing lines in Finland. In other cases, e.g. in major revisions of existing lines, the applicability of this Part 3-7 shall be determined case by case in each project by the line owner or the competent authority.

(ncpt) **FI.2 Application of covered conductors**

This Part 3-7 includes the requirements for the design and construction of overhead lines with application of covered conductors.

(ncpt) **FI.3 Application of cables for telecommunication**

This Part 3-7 includes the requirements for the application of optical cables to be used along electrical power lines (OCEPL).

(ncpt) **FI.4 Application to mounting of telecommunication equipment**

This Part 3-7 is applicable for fixing of structural elements for telecommunication (e.g. dishes), if mounted on power line supports (towers), especially regarding wind forces and ice loads on such fixed elements. The design and installation shall be done under the due control of the line owner and/or the competent authority.

If telecommunication equipment (aerials, dishes etc) will be installed on the transmission line supports and their size, location or mounting will have major effects on the loads or design of the structures, the requirements of ENV 1993-3-1 Towers and Masts have also to be taken into account.

2 Definitions, symbols and references

2.3 References

(A-dev) **FI.1 National normative laws, government regulations**

Sähköturvallisuuslaki (410/1996)
Electrical Safety Act

Sähköturvallisuusasetus (498/1996)
Electrical Safety Decree

Kauppa- ja teollisuusministeriön päätös sähkölaitteistojen turvallisuudesta (1193/1999)
Decision of Ministry of Trade and Industry on Safety of electrical installations

Määräys puhelinverkon sähköisestä suojaamisesta, Viestintävirasto 43 B/2003 M
Electrical protection of a telephone network, Finnish Communications Regulatory Authority

(ncpt) **FI.2 National normative standards**

SFS 2662 Ilmajohtotarvikkeet. Puupylväs
Line materials. Wood pole

SFS 4332 Ilmajohtotarvikkeet. Pylväsrunkoon kiinnitettävät tunnuskilvet
Overhead line materials. Sign plates for wood poles

SFS 5717 Maakaasun siirtoputkiston sijoittaminen suurjännitejohdon tai kytkinlaitoksen läheisyyteen
Placing of the natural gas transmission pipeline close to a high-voltage line or substation

SFS 6001 Suurjännitesähköasennukset
High voltage electrical installations

(ncpt) **FI.3 Informative national documents**

A4-93 Vahvavirtailmajohtomääräykset, Sähkötarkastuskeskuksen julkaisu 1993
High Voltage Overhead Line Regulations. Publication of Electrical Inspectorate 1993

SFS 5790 12/20 kV ilmajohdot, PAS-järjestelmä, 1995
12/20 kV Overhead Lines, PAS-system

SFS 5791 12/20 kV ilmajohdot, PEX-päällysteiset PAS-johtimet, 1994
12/20 kV Overhead Lines, XLPE-covered overhead conductors PAS

SFS 5792 12/20 kV ilmajohdot, PAS-rakenteet ja valokaarisuojat
12/20 kV Overhead Lines, Constructions and light arc protection devices for XLPE-covered overhead conductors PAS

3 Basis of design

3.2.2 Reliability of overhead lines

(ncpt) **FI.1 Selection of reliability levels**

Three reliability levels are used as follows:

Level 1	≤ 45 kV:	normal lines
	> 45 kV:	temporary or unimportant lines
Level 2	≤ 45 kV:	special lines
	> 45 kV:	normal lines
Level 3	all voltages:	very important lines

At voltages ≤ 45 kV the level 1 and at voltages > 45 kV the level 2 shall be used, if not otherwise specified in the Project Specification.

3.2.5 Coordination of strength

(ncpt) **FI.1 Tension and angle supports**

The partial factors γ_M for the resistance of all structural elements of angle supports (angle ≥ 10 degrees), tension and terminal supports shall be multiplied by the factor 1,1. This requirement needs not to be applied in the load case “Construction and maintenance”.

In addition to the above mentioned partial and extra material factors in multi-guyed portal steel supports an additional material factor shall be used in the design of the elements of the legs. The factor is 1,1 for supports with one intermediate guy level and 1,2 for supports with two or more intermediate guy levels.

4 Actions on lines

4.2.2.1 Wind speeds

(snc) **FI.1 Reference wind speeds**

For the reference wind speed V_R(II) the following values shall be used:

V_R(II) = 21 m/s, for main land

V_R(II) = 25 m/s, for off-shore areas (open coast line and archipelago)

The proper terrain type shall be determined according to ENV 1991-2-4 taking into account the associated National Application Document. If not otherwise specified in the Project Specification, the terrain type II shall be used for main land and terrain type I for off-shore areas.

Other wind and terrain parameters may be used if they are based on the local conditions and reliable statistics. These values shall be given in the Project Specification.

NOTE The typical Finnish inland terrain with forests and small hills can be considered as type III. The open farmed countryside should be considered as type II.

4.2.2.4.1 Wind forces on conductors

(ncpt) **FI.1 Span factor**

The span factors calculated from formulae in Table 4.2.5 shall be multiplied with the reduction factor 0,8 in order to take into account the long developing period of the wind load on conductors. When calculating the span factor for the sag and tension analysis the actual tension section length may be used as the span length. However, the span length to be applied in the calculations shall not exceed 5 km.

When calculating the span factor in the tower load analysis the average length of the adjacent spans of the support concerned shall be used as the span length.

(ncpt) **FI.2 Effective height of the conductor**

When calculating the wind pressure, the effects of the altitude and temperature as well as the relative terrain height shall be taken into account. In the conductor tension analysis the average height of the conductor in each tension section shall be used. Respectively, in the tower load calculations the average height of the adjacent spans shall be used. The value of the height for the lowest conductor shall not be less than:

$H_{cond} = H_0 + H_{min} + S_{Tmax} - 2\, S_{Wind} / 3 + 1$ m where

H_0 = relative terrain height; for flat terrain $H_0 = 0$.
H_{min} = minimum clearance to ground (at maximum temperature)
S_{Tmax} = vertical sag at maximum temperature
S_{Wind} = vertical sag at the wind load case concerned

The height for other conductors and earthwires shall be calculated by taking into account the relevant vertical clearance between the conductors. If a constant height value will be used for all conductors and earthwires, it shall be calculated according to the height of the uppermost phase conductor.

4.2.2.4.2 Wind forces on insulator sets

(ncpt) **FI.1 Wind area of insulator**

The wind load of an insulator set shall be calculated according to Part 1. The projected wind area of the insulator shall be calculated from:

$A_{ins} = L\ D \cos \alpha_i$ where

L = effective length of the insulator string
D = outer diameter of the insulator unit
α_i = swing angle of the insulator at the final loaded position

(ncpt) **FI.2 V-insulator set dimensions**

The dimensions of a V-insulator set configuration shall be such that the direction of the resulting force from the conductors will lie inside the angle between the two arms of the insulator set in all load cases. The loads are calculated without load factors using the 3-year wind load in cases where wind is present.

4.2.2.4.3 Wind forces on lattice towers

(ncpt) **FI.1 Drag factors**

The wind forces on the rectangular towers shall be calculated according to Part 1. However, while the explicit parameters for the drag factors C_{xT1} and C_{xT2} are not specified in Part 1, they shall be taken from ENV 1993-3-1 Towers and Masts. For the same reason the drag factors of other types of lattice towers (towers with triangular body or towers containing mixed profile shapes, i.e. tubular legs and angle bracings) shall be calculated according to ENV 1993-3-1.

4.2.3 Ice loads

(snc) **FI.1 Conductor ice loads**

The philosophy in defining ice loads is based on ISO 12494. The ice load on the conductor depends on the relative altitude, which is defined as the altitude difference between the conductor and the average level of the surrounding terrain within a distance of 10 km from the site. If no other reliable information is available the values given in Table 4.2.3/FI.1 shall be used. Other parameter values based on the long term statistics and experience on the local conditions may be given in the Project Specification. The ice load parameters for relative altitudes above 200 m should generally be evaluated by meteorologists.

Table 4.2.3/FI.1 - Conductor ice load

Icing category	Relative altitude (m)	Reference ice load I_R (N/m)	Density (kg/m^3)	Drag factor	Type of ice
I	0 - 50	10	500	1,15	rime
II	50 - 100	25	500	1,15	rime
III	100 - 200	50	500	1,15	rime
IV	> 200	75	500	1,15	rime

(ncpt) **FI.2 Ice on structures and insulators**

No ice is considered on structures or insulators, if not otherwise specified in the Project Specification.

4.2.5 Temperature effects

(snc) **FI.1 Reference condition**

The reference condition is specified as still air condition with no ice at reference temperature 0 °C. The temperatures in different load conditions are given in Table 4.2.11/FI.1.

(ncpt) **FI.2 Minimum temperatures**

The minimum temperatures T_{min} (°C) have been calibrated to correspond the region and return period of the reliability level concerned. They are given in Table 4.2.5/FI.1. The proper region and possible deviations from the values in the table shall be specified in the Project Specification.

Table 4.2.5/FI.1 - Minimum temperatures (°C)

Temperature region	Reliability level			3-year value
	1	2	3	
Southern Finland	- 40	- 45	- 50	- 30
Middle Finland	- 45	- 50	- 55	- 36
Northern Finland	- 50	- 55	- 60	- 42

4.2.7 Security loads

(ncpt) **FI.1 Security loading definition**

The security loading according to the case (a) in Part 1 shall be applied taking into account the following:

All conductors are assumed as intact. The transversal and vertical forces are the same as those in the reference (EDS) condition. Note that in the tower load calculations the hinged dropper is not supposed to be inclined in the line direction.

The value of the static longitudinal security force is the force of one sub-conductor of any phase conductor or earthwire at the reference condition. The direction of the force is perpendicular to the structure in line direction (i.e. perpendicular to the cross-arm of the support). The point of action of the force is the attachment point of the insulator at the structure.

In case of V-insulator set the longitudinal load force shall be evenly distributed into the attachment points of the strings. In the case of V-insulator set with hinged dropper for the outer string, the point of action of the longitudinal force component concerned is the outermost attachment point of the dropper at the cross-arm.

(ncpt) **FI.2 Other longitudinal loads**

In other load cases than the security case all load components including the possible longitudinal loads shall be placed in the correct locations at conductor attachment points.

The insulator and hinged dropper is assumed to be properly inclined due to the longitudinal force. This fact together with possible simultaneous transversal load component may cause significant secondary bending and torsional effects especially in angle towers.

4.2.10 Load cases

4.2.10.1 General

(ncpt) **FI.1 Conductor sag and tension calculations**

The partial load and reduction factors shall be applied on the loads prior to the conductor tension analysis.

When using an iterative stress balancing method in calculating the conductor tensions for cases with unbalanced ice at suspension supports (icing categories III and IV) at least 6 spans on both sides of the support concerned shall be considered.

In the calculations the conductor shall be treated as a catenary curve (hyperbolic formula). The parabola approximation is allowed for span lengths below 500 m. A non-linear stress-strain curve shall be used according to the specification and parameters given by the conductor manufacturer.

Normally the sag and tension calculations shall be done for each load case by using the ruling (equivalent) span method. The calculations shall be based on the reference (EDS) condition. The reference stress is the nominal value of the conductor stress in the reference condition (still air, no ice, T=0 °C) after the decrease of stress due to creep has ceased.

The main assumption for the validity of the ruling span method is that the variation of the span length from span to span is reasonable. In the case of earthwires the ruling span shall be taken conservatively as equal to the actual span length.

(ncpt) **FI.2 Effect of unequal spans**

Large variations in span lengths, especially between two adjacent spans, will cause variation in the conductor stress from span to span and thus also longitudinal loads. The shorter the insulator string is the bigger is the effect of this variation. This effect is often significant in the case of earthwires (short clamps) and during loads where ice is present. If the span ratio between the adjacent spans is large enough, other load cases may also cause longitudinal loads, which should be taken into account in the tower loads.

Exact rules for judging, when the longitudinal loads due to unequal spans shall be taken into account, cannot be given. The designer should verify it case by case. A rule of thumb is that the effect of the longitudinal load is considered to be significant if its value exceeds 5% of the force of one sub-conductor in reference condition.

In these cases the ruling span method cannot be used directly. In the load calculations for suspension towers the tensions of the phase conductors of a line section should be calculated by using a global (complete line) analysis technique taking into account the effects of at least 3 spans on both sides of the support concerned. For tension towers a similar approach can be applied but taking into account the effects of the different tension sections. Earthwires can also be analysed by this method. With this kind of analysis technique the relaxing effect of the insulators and suspension clamps will be taken into account.

Also the relaxing effect of the displacements of the supports can be taken into account when calculating the conductor stresses and longitudinal forces. However, in the case of self-supporting lattice supports this effect is not significant.

More conservative simplified methods can be used as well.

(ncpt) **FI.3 Creep compensation**

Due to the creep phenomenon the conductor shall normally be overstressed in installation. The nominal reference stress is supposed to be achieved within a few months' or one year's time from stringing. The extreme weather conditions are not expected to occur during this time. The correct initial stress at stringing depends on the type of the conductor. In the stringing load case creep compensation may be taken into account by applying the compensation temperature of the conductor concerned to the temperature value for the stringing load case. Detailed parameters shall be acquired from the Project Specification or conductor manufacturer.

4.2.10.2 Standard load cases

(ncpt) **FI.1 Load case definition**

The load cases and partial load factors are specified in Table 4.2.11/FI.1. The following remarks shall be taken into account:

(ncpt) **FI.2 Extreme low temperature**

In the extreme low temperature case the wind load shall not be taken into consideration and the temperature shall be according to 4.2.5/FI.2.

(ncpt) **FI.3 Dropped ice**

In addition to the normal ice load case the case dropped ice in one span shall be allowed for as follows: Uniform reduced ice load (without wind) in all spans of the phase conductors and earthwires but one span of any one phase conductor (including all sub-conductors) or earthwire non-iced. This case shall be applied only in icing categories III-IV, if not otherwise specified in the Project Specification.

(ncpt) **FI.4 Unbalanced ice**

The following α-factors shall be used:

α = 0,50 α_1 = 0,35 α_2 = 0,70 α_3 = 0,35 α_4 = 0,70

4.2.11 Partial factors for actions

(ncpt) **FI.1 Load and reduction factors**

Partial load factors γ_F and reduction factors Ψ for different actions are given in Table 4.2.11/FI.1. The following definitions are used:

Extreme wind = 50 year return period wind load based on the reference wind speed value and including the gust, terrain, height, altitude and temperature effects

High wind = Extreme wind load x 0,70 (i.e. ~85% of the extreme speed)

Reduced wind = Extreme wind load x 0,58 (i.e. ~75% of the extreme speed, i.e. three year return period value, to be applied in clearance calculations only)

Moderate wind = Extreme wind load x 0,40 (i.e. ~65% of the extreme speed)

Extreme ice = Reference ice load

Moderate ice = Reference ice load x 0,37

Table 4.2.11/FI.1 - Load cases, temperatures, reduction and partial load factors

Nr	Load case	Temp	Wind	Ice	Level 1		Level 2		Level 3		Weig
		° C	Ψ_W	Ψ_I	γ_W	γ_I	γ_W	γ_I	γ_W	γ_I	γ_G
1a	Extreme wind	- 20	1,00		1,00		1,20		1,40		1,00
1b	Extreme low temperature	T_{min}									1,00
1c	Reduced wind	0	0,58		1,00		1,00		1,00		1,00
2a	Extreme ice	0		1,00		1,00		1,20		1,40	1,00
2b*	Uniform ice, transversal bending	0		α_i		1,00		1,20		1,40	1,00
2c*	Unbalanced ice, longitud. bend.	0		α_i		1,00		1,20		1,40	1,00
2d*	Unbalanced ice, torsional bend.	0		α_i		1,00		1,20		1,40	1,00
2e*	Dropped ice	0		0,70		1,00		1,20		1,40	1,00
3a	Extreme ice + moderate wind	0	0,40	1,00	1,00	1,00	1,00	1,20	1,00	1,40	1,00
3b	Moderate ice + high wind	0	0,70	0,37	1,00	1,00	1,20	1,00	1,40	1,00	1,00
4	Construction, maintenance	- 20			$\gamma_P = 1{,}50$						1,00
5	Security loads	0			$\gamma_A = 1{,}00$						1,00

(ncpt) **FI.2 Ice thickness**

The ice thickness shall be calculated from the extreme ice load value multiplied by the relevant reduction and load factors.

(ncpt) **FI.3 Ice load cases**

The cases marked with an asterisk (*) shall be checked in icing categories III-IV only or if required in the Project Specification. See α-factors in 4.2.10.2/FI.4.

(ncpt) **FI.4 Wind directions**

In load conditions where wind is present the most severe wind directions should be considered. The wind directions concern also cases for combined wind and ice loads. Normally it is sufficient to study the wind directions (i.e. deviations from the direction perpendicular to the line) for different support types as follows:

- Self supporting lattice supports: 0, 20 and 45 degree winds
- Guyed supports with square lattice legs: 0, 20 and 45 degree winds
- Other support types: 0 degree wind

Other relevant wind directions shall also be considered if these are expected to control the design of supports (i.e. T-off supports etc.).

In conductor tension calculations the perpendicular wind direction shall be used in all load cases if the global direction of the line cannot be clearly defined.

5 Electrical requirements

5.4.2.1 General considerations and underlying principles

(ncpt) **FI.1 Determination of clearances**

The clearances given in this Part 3-7 overrule those given in Part 1. For the clearances not mentioned here Part 1 shall be applied. Higher values for clearances may be given in the Project Specification.

The values for basic electrical clearances D_{el}, D_{pp}, $D_{50\ Hz\ p\text{-}e}$ and $D_{50\ Hz\ p\text{-}p}$ are given in Table 5.4.2.1/FI.1.

When calculating serviceability limits, e.g. clearances, the partial load factors shall not be applied.

The clearances shall fulfil the requirements in the load cases given in 5.4.2.2/FI.1-5. The permanent conductor elongation due to all the load cases given in Table 4.2.11/FI.1 and creep shall be taken into account.

Table 5.4.2.1/FI.1 - Basic electrical clearances D_{el} and D_{pp}

Nominal voltage (kV)	Highest system voltage (kV)	D_{el} (m)	D_{pp} (m)	$D_{50\ Hz\ p\text{-}e}$ (m)	$D_{50\ Hz\ p\text{-}p}$ (m)
1-10	1,1-12	0,12	0,10		
20	24	0,22	0,25		
30	36	0,32	0,40		
45	52	0,48	0,70		
110	123	0,9	1,4	0,23	0,37
220	245	1,5	2,3	0,43	0,69
400	420	2,9	3,9	0,70	1,17

In case of aerial bundled cables, earthing conductors and earth wires the basic electrical clearances shall be taken as zero.

5.4.2.2 Load cases for calculation of clearances

(ncpt) **FI.1 Minimum temperature**

The three year return period value for the minimum temperature shall be according to 4.2.5/FI.2.

(ncpt) **FI.2 Maximum temperature**

If not otherwise specified in the Project Specification the following maximum temperatures shall be used:

Phase conductors	70 °C
Conductors or parts with no electrical load (earthwires, messengers, overhead earthing conductors etc.)	40 °C

(ncpt) **FI.3 Ice loads**

Normal case:

Uniform extreme ice load in all conductors according to 4.2.3/FI.1 and 4.2.11/FI.1-4. The temperature is 0 °C. The simultaneous wind load is not considered.

Exceptional case:

The upper conductor or earthwire is iced and the lower conductor is non-iced. The temperature is 0 °C. The simultaneous wind load is not considered.

(ncpt) **FI.4 Wind loads**

Reduced wind load:

Wind load of three year return period, i.e. the extreme wind load multiplied by the factor 0,58.

Extreme wind load:

Wind load of 50 years return period.

The assumed temperature is 0 °C in both cases.

(ncpt) **FI.5 Combined ice and wind loads**

Combined ice and wind loads need not to be taken into account in the determination of clearances.

5.4.3 Clearances within the span and at the tower

(ncpt) **FI.1 Reduction factor for clearances**

The reduction factor k_1 is 0,65.

(ncpt) **FI.2 Calculation of clearances at the tower**

The clearance between the clamping points of phase conductors and between the phase conductors and earthwires shall be calculated as follows:

When the conductors are in a horizontal configuration or their vertical clearance $v \leq 0{,}2\ v_0$, their horizontal clearance shall be $e \geq e_0$.

When the conductors are in a vertical configuration or their horizontal clearance is $e \leq 0{,}2\ e_0$, their vertical clearance shall be $v \geq v_0$.

When the conductors are in neither configuration mentioned above, their horizontal and vertical clearance shall be chosen so that the following inequality is fulfilled:

(a) $e/e_0 + v/v_0 \geq 1{,}2$

The values e_0 and v_0 shall be calculated as follows:

(b) $0{,}5 + D_{el} \leq e_0 = 0{,}6\sqrt{f_T + l_k} + D_{el}$

(c) $0{,}8 + D_{el} \leq v_0 = \sqrt{f_T + l_k} + D_{el}$

l_k = length of suspension string or equivalent hanging from one point

f_T = conductor sag at 50 °C allowing for the conductor permanent elongation caused by the three year minimum temperature load (see Table 4.2.5/FI.1).

In the case of two dissimilar conductors, e.g. phase conductor and earthwire, the clearance shall be calculated using the bigger sag.

In the case of bundle conductors the clearance shall be measured between the nearest subconductors.

The consideration of corona effect may lead to much higher clearance requirements than those in the calculations above. This shall be allowed for in the Project Specification.

In the case of covered conductors the clearances at the tower, derived from equations a-c above, can be considerably reduced. The requirements shall be specified in the Project Specification.

(ncpt) **FI.3 Clearance between phase conductor and earthwire in exceptional case**

In the exceptional case according to 5.4.2.2/FI.3 the minimum clearance between the phase conductor and the earthwire shall be according to Table 5.4.3.

(ncpt) **FI.4 Clearances for covered conductors**

The minimum internal clearances for covered conductors shall be at least one third of those required for bare conductors. By particular tested constructions even lower clearances can be allowed.

5.4.4 Clearances to ground in areas remote from buildings, roads etc.

(ncpt) **FI.1 Clearance to rockface or steep slope**

No reductions in clearances are allowed in the case of rockfaces and steep slopes in comparison with the normal ground profile.

(ncpt) **FI.2 Clearance to trees**

The minimum clearance is 1,0 m + D_{el} to normal trees and 4 m + D_{el} to fruit trees.

By covered conductors the minimum clearance to normal trees is 0,3 m + D_{el}.

5.4.5.2 Residential and other buildings

(ncpt) **FI.1 Line close to heated buildings and special open depots**

If the horizontal clearance from an aerial bundled cable, earthing conductor or earth wire to any part of a building or open depot is less than 0,5 m, the height from the said part shall not be less than 2,5 m. In case an aerial bundled cable is located beside the building the horizontal clearance from a balcony or window shall not be less than 1,25 m.

The horizontal clearance from an overhead line to a heated building shall not be less than 3 m + D_{el}. If this requirement is not fulfilled the vertical distance from a building shall be at least 4 m + D_{el}. An overhead line conductor shall, however, not locate above any part of a heated building.

The horizontal clearance from an overhead line to windows and balconies shall, however, be at least 5 m + D_{el} without exception.

The same applies also to those unheated buildings belonging to the same densely situated group of buildings with the heated building. However, an open shelter is not regarded as an aforementioned building.

The horizontal clearance from a power line to a an open depot containing goods which are long and easy to move shall not be less than 3 m + D_{el}.

(ncpt) **FI.2 Line ending to a building**

Generally it is not allowed to end an overhead line to a building except at switching plants.

The clearance from an aerial bundled cable, earthing conductor or earth wire to the edge of a balcony, window, roof eave etc. shall not be less than 0,5 m at the line end point.

(ncpt) **FI.3 Line close to other buildings, warehouses etc.**

The minimum horizontal clearance specified in FI.1 applies also to any part of other buildings, open depots etc. However, if the horizontal distance cannot be met then the vertical clearance to any part of the building etc. shall be at least 4 m + D_{el}. The clearance can, however, be reduced to 2 m + D_{el}, but not less than 3 m to parts on which one cannot easily stand.

(ncpt) **FI.4 Line adjacent to fuel stations etc.**

The distance of a line support to a fuel station etc. shall not be less than half of the total tower height.

(ncpt) **FI.5 Line near to antennas, street lamps etc**

The minimum clearance to antennas, lightning protection facilities, street lamps, flag poles, advertising signs and similar structures shall be 2 m + D_{el}, but not less than 3 m.

5.4.5.3 Traffic routes

(ncpt) **FI.1 Line close to or crossing roads, railways and navigable waterways**

The following are considered as equivalent to roads: streets and roads, market places, public squares, parking places, loading and unloading areas.

The clearance from a line support to the road edge should not be less than 2 m.
When crossing a road belonging to the net of extra high transportation the clearance shall fulfil the requirements given by the Finnish National Road Administration.

No clearance reduction is allowed for minor roads with the exception of a snowmobile route according to the law for the cross-country traffic. For those clearances to ground in remote areas shall be applied.

(ncpt) **FI.2 Line close to or crossing railways**

If the minimum horizontal clearance to a rail or a structure of an electrified railway is less than 5 m + D_{el}, the minimum vertical clearance between the conductors and the top of the rail level shall be 7 m + D_{el}. However, in the case of an electrified railway with overhead contact system the minimum clearance shall be 11,5 m + D_{el}.

(ncpt) **FI.3 Navigable waterways**

The information concerning the highest masts of vessels is given by the Finnish Maritime Administration.

5.4.5.4 Other power lines or overhead telecommunication lines

(ncpt) **FI.1 Crossing of lines**

In case of an overhead line the minimum vertical clearance between the lowest conductors of the upper circuit and any part of the lower high voltage, low voltage, telecommunication or mechanical line shall be 1,5 m + D_{el}, where D_{el} is determined according to the higher voltage.

Note: Crossing of mechanical lines such as ropeways, see table 5.4.5.3.1.

The minimum clearances are determined in the cases of 5.4.2.2/FI.1, FI.2, FI.3 (normal case) and FI.4 (reduced wind load). In the case of crossing a low voltage line or telecommunication line the exceptional case according to 5.4.2.2/FI.3 shall also be allowed for.

Clearances between supports, aerial bundled cables, earthing conductors and earth wires are not restricted. However, when needed they shall be located apart from each other to avoid mechanical damage and to prevent the transfer of excessive earth potential from one line to another.

If crossing lines are on a common structure, the minimum clearances shall be determined as for parallel lines on common structures (see 5.4.5.4/FI.2, FI.3 and FI.4). In this case the sag is not significant.

(ncpt) **FI.2 Parallel electrical lines on common structures**

The clearance between the nearest phase conductors of the different circuits on a common structure shall fulfil the requirements given in 5.4.3/FI.2 with the exception that the basic electrical distance D_{el} shall be multiplied by 1,15 in the formulae (b) and (c) if the circuits have the same voltage and by 1,50 if the circuits have different voltages.

The minimum clearance between the phase conductors of the different circuits shall, however, not be less than 1,5 m + D_{el}.

D_{el} shall be determined according to the higher voltage.

The minimum clearances shall be determined in the cases of 5.4.2.2/FI.1, FI.2, FI.3 (normal case) and FI.4 (reduced wind load).

Clearances between aerial bundled cables are not restricted. However, when needed they shall be located apart to avoid mechanical damage and to prevent the transfer of excessive earth potential from one line to another.

(ncpt) **FI.3 Parallel high voltage and low voltage lines on common structures**

The low voltage (≤ AC 1 kV) line shall not be a bare overhead line. Normally bundle assembled aerial cables are used.

The minimum clearance between the phase conductors of the high and low voltage lines shall not be less than 1,5 m + D_{el}.

The minimum clearances shall be determined in the cases of 5.4.2.2/FI.1, FI.2, FI.3 (normal case) and FI.4 (reduced wind load). The minimum clearance shall also be determined in the case of 5.4.2.2/FI.3 (exceptional case) when it shall be not less than D_{pp}.

D_{el} and D_{pp} shall be determined according to the higher voltage.

Exposed conductive parts shall be earthed according to the requirements of both lines. The protective earthing of metallic parts exposed to voltages of both lines (e.g. metal or concrete poles) shall simultaneously fulfil the requirements of both systems.

On a timber structure the minimum length of wood between the support fixing devices of the high voltage and low voltage line insulators and other parts exposed to voltage shall be as follows:

Table 5.4.5.4/FI.1 - Required length of wood

Nominal voltage (kV)	Length of wood (m)
≤ 45	1,0
110	2,0
220	3,5
400	6,0

If the requirement of Table 5.4.5.4/FI.1 is not fulfilled, the support fixing devices of the high voltage line insulators shall be earthed and there shall be at least 100 mm of wood between the said parts.

The clearance between a high voltage bundle assembled cable and low voltage line shall be determined case by case in each project.

FI.4 Parallel electrical and telecommunication lines on common structures

When the owner of the high voltage line and the telecommunication line is not the same, there shall be a formal written agreement concerning common structures between the owners of the lines.

The telecommunication cable shall have an earthed continuous sheath, which is able to withstand the phase-to-earth fault current of the high voltage line.

The minimum clearance between the phase conductor of a bare high voltage line and telecommunication line shall not be less than 2 m + D_{el}. The distance between the fixing points of the lines (except in the case of only one crossing pole) shall also fulfil the requirement of 5.4.3/FI.2, where the value of D_{el} is increased by 50 %.

The minimum clearances shall be determined in the cases of 5.4.2.2/FI.1, FI.2, FI.3 (normal case) and FI.4 (reduced wind load). The minimum clearance shall also be determined in the case of 5.4.2.2/FI.3 (exceptional case) when it shall be not less than D_{pp}.

D_{el} and D_{pp} shall be determined according to the higher voltage.

On a timber structure the minimum length of wood between the support fixing devices of the high voltage line insulators and other parts exposed to voltage and the support fixing device of the telecommunication line shall be at least according to 5.4.5/FI.3. If this requirement is not fulfilled, the support fixing devices of the high voltage line insulators shall be earthed and there shall be at least 100 mm of wood between the said parts.

In the case of an ADSS and similar all dielectric cable the clearance shall be determined case by case in each project.

(ncpt) **FI.5 Parallel or converging lines on separate structures**

The minimum horizontal clearance between the phase conductor of the power line and any part of a parallel high voltage, low voltage, telecommunication or mechanical line shall be 2,5 m + D_{el}, where D_{el} is determined according to the higher voltage. High voltage lines are assumed to be in a same interrelated condition according to 5.4.2.2/FI.4 (reduced wind load). Low voltage, telecommunication and mechanical lines are assumed to be in still air condition.

The mutual clearance between the phase conductors of the different lines shall be at least 15 % greater than the maximum internal phase distance of the said lines.

(ncpt) **FI.6 Voltages caused by inductive or capacitive coupling**

The utilization of long parallel high voltage and low voltage, telecommunication or mechanical lines may be limited by the voltages caused by inductive or capacitive coupling (see SFS 6001, SFS 5717 and regulation on electrical protection of a telephone network 43 C/2004M).

NOTE 1 SFS 6001 states that an electrical installation has to be constructed in such a way that it does not excessively disturb another electrical equipment or cause danger in their use. It also states that the usually the most practical way is to change or improve the technical structure of the disturbed equipment.

NOTE 2 SFS 5717 gives instructions for placing natural gas pipelines in the vicinity of power lines and vice versa. It can also be applied to other types of pipelines.

NOTE 3 Regulation on electrical protection of a telephone network 43 B/2003M gives limit values for the allowable induced voltages on the conductors of telecommunication lines caused by both the normal operation current and earth fault current of the power line.

6 Earthing systems

6.2.4.2 Measures for the observance of permissible touch voltages

(ncpt) **FI.1 Comments on the explanatory remarks**

(6) When determining the touch voltage U_T the potential grading electrodes shall be taken into account. The determination can be done either by calculations or measurements.

The potential grading may consist of an earth electrode or electrodes connected galvanically to the metallic, touchable part of the tower and buried ca. 0,5 m underground at a distance of 1,00 m to 1,25 m.

(8) If permissible touch voltage levels cannot be achieved in the vicinity of the tower the following methods to guarantee human safety may be used:

- isolation by a fence made of insulating material far enough from the tower structure to prevent an accidental touching of the metallic parts of the tower
- covering of the ground around the tower by an insulating material, e.g. gravel

(ncpt) **FI.2 Transferred potentials**

The transferred potential shall be checked if the line support or earth electrodes are located closer than 100 m to a low voltage earthing electrode or any other metallic part connected to the PEN-conductor and ground. The verification may be done either by calculations or measurements. The transferred voltage to the PEN-conductor shall not exceed 1 500 V/√t, where t is the longest continuous duration of the earth fault current.

The voltage stress caused by the earthing voltage shall not exceed 60 % of the 50 Hz, 1 min test voltage of the insulating component, e.g. the insulation of an earthed part or earthing conductor, see SFS 6001 Annex Y.

The requirements regarding transferred potentials to telecommunication network are given in the regulation on electrical protection of a telephone network 43 C/2004M.

NOTE Regulation on electrical protection of a telephone network 43 B/2003M gives limit values for the allowable transferred voltages in the circuits and touchable metallic parts of telecommunication equipment due to the earth potential rise caused by power line earth faults.

7 Supports

7.5 Timber poles

7.5.3 Materials

(ncpt) **FI.1 Dimensions**

The top diameter of the wooden pole shall not be less than 150 mm. The slenderness ratio of the wooden pole is not limited, but the slenderness of other compressed timber components shall not exceed the value 200.

The tapering of the wood pole can be taken into account using the actual dimensions. In the lack of exact dimensions the tapering of the diameter can be taken as 0,75 % of the length.

7.5.5.3 Resistance of members

(ncpt) **FI.1 Strength of material**

In general the strength of wooden structures shall be calculated according to Eurocode 5 using parameters specified below. The timber poles shall be designed so that in any cross section the following equation is satisfied:

$$\sigma \leq \sigma_{ref} / \gamma_M$$

σ = calculated stress
σ_{ref} = characteristic strength
= 41,8 MPa for the Finnish pine tree
γ_M = partial factor for wood material
= 1,3 for normal short term load conditions (i.e. wind, ice)
= 1,1 for accidental load conditions (security loads)
E = 10000 MPa (modulus of elasticity)
K_{mod} = 1,0 (reduction factor)

7.7 Guyed structures

7.7.5.1 Basis

(ncpt) **FI.1 Partial safety factors of guys**

The partial safety factor γ_{M2} for guys and their fittings to the ultimate strength shall be taken as follows:

Guys and their fittings	γ_{M2} = 1,40
Strain insulators	γ_{M2} = 2,00

The strength of the guying set (guy with fittings) shall not be less than 90 % of the strength of the guy.

7.7.5.3 Second order analysis

(ncpt) **FI.1 Single-guyed supports**

In single-guyed portal supports (one guy level with four guys ony) the linear elastic analysis can be applied when calculating the forces in the main components (legs, cross-arm and guys) of the support. However, the global stability of the legs and cross-arm shall be verified in separate analyses, where the geometric non-linearity (PD-effect) due to the compressive force of the leg is taken into account.

(ncpt) **FI.2 Multi-guyed supports**

In multi-guyed steel supports the analysis model shall take into account also the large displacements and changing locations of the load points. An incremental load analysis is recommended. Care should be taken, when selecting the guy sizes for the lower guy levels and when specifying the initial guy tensions. The effects of the bending moments at the intermediate guy levels shall be duly taken into account in the stresses of the legs. Due account shall be allowed for checking the slacking guys in each load case concerned.

(ncpt) **FI.3 Global stability**

A separate verification for the global stability is not needed, if the analysis is made by using an incremental large displacement FEM-analysis, where the effects of the 2nd order geometric nonlinearity (PD-effect) of compressed beam elements are taken into account in the stiffness of the elements. This approach enables the implicite handling of the global stability of the entire structure. However, in the analyses of the security load cases the use of the linear approach in the element stiffness is allowed because of the complexity of the case.

(ncpt) **FI.4 Guying effect of the conductors**

The guying effect of the conductors or earthwires shall not be taken into account in the analysis for security load cases. In other cases it can be done, if necessary for the design.

(ncpt) **FI.5 Special load case**

The leg shall be checked also for a special load case, where the wind load of the leg is neglected while the other loads remain the same as in the case, where the compression of the leg has its maximum value.

7.7.6 Design details for guys

(ncpt) **FI.1 Earthing of guys**

The guy of an overhead line shall be earthed or a strain insulator shall be used in the following cases:

- the guy is located at a distance less than 0,5 m + D_{el} from a live part
- the guy can touch a live part if it is loosened or broken
- on timber supports the length of wood is less than determined in 5.4.5.4/FI.3

If the guy is earthed, the earthing shall be made at that end where, in the case the guy comes off, the voltage cannot reach the guy (if needed, the earthing shall be made at both ends).

If a strain insulator is used, the insulator shall be located so that the distance of the anchor end of the guy (usually the lower part) from live parts is no less than 0,5 m + D_{el} even when the guy is loosened or broken.

The lower end of a guy insulator in its normal position shall be at a distance of no less than 3,5 m + D_{el} from ground surface. Even if the guy is loosened or broken the lower end of the insulator shall not come nearer than 3,0 m + D_{el} to ground surface.

(ncpt) **FI.2 Maximum slendernesses**

Maximum slendernesses of structural elements in guyed supports are listed below. The values for legs concern also each span of the leg, if the support contains more than one guy level.

Lattice steel leg	120
Tubular steel leg	200
Wooden leg	250
Horizontal beam between legs	250
Tension members in cross-arm	350

In the beam cross-arms with pairs of tension members the slenderness of the tension members can be calculated from the intermediate distance of the tying elements connecting the pair of tension members.

(ncpt) **FI.3 Other requirements and details for guys**

The characteristic resistance of the guy material shall not exceed 1,6 kN/mm^2.

In the attachment of the guys wedge clamps or other relevant fittings based on reliable and documented type tests shall be used. However, rope clamps are not accepted.

Thimbles or equivalent accessories with a reasonable diameter (proven by tests) shall be used at the ends of the guys if the wire will be bent.

The design of the guys shall be based on the tested values of the parameters given by the manufacturer. These are for instance the modulus of elasticity and tensile strength of the guy wire and the diameters of the thimbles.

8 Foundations

8.5.1 General

(ncpt) **FI.1 Design documents**

The foundations shall be designed and calculated according to ENV 1997-1-1 or according to the following national publication:

RIL 121 Pohjarakennusohjeet
Foundation engineering rules

NOTE 1 This publication contains the principles for the geotechnical design and construction of the foundation structures.

8.5.2 Geotechnical design by calculation

(ncpt) **FI.1 Uplift resistance of guy anchors**

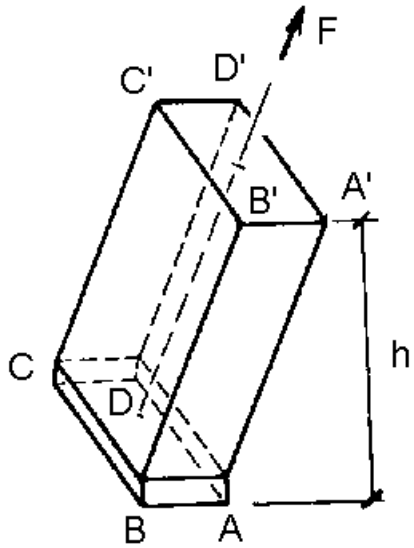

Figure 8.5/FI.1 - Uplift resistance of guy anchors

The ultimate uplift resistance of rectangular shaped anchor plates of guyed towers shall be calculated from the following formulae (see Figure 8.5/FI.1):

$F = G + k\,h^2\,U\,\tan\Phi$ in friction soil

$F = G + C\,h\,U$ in cohesion soil

$0{,}3\,U < h < U$

where

G = total weight of the anchor plate and soil block above it

U = circumference of the anchor plate

h = submersion depth of the anchor plate, measured from the lower surface of the anchor plate

k = constant depending on the friction of soil in question. The following values may be used:

k =	13...18 kN/m^3	boulders, cobbles
	9... 16kN/m^3	glacial till, moraine
	11...16 kN/m^3	gravel
	10...15 kN/m^3	sand
	9...13 kN/m^3	silt

Φ = angle of internal friction

C = constant depending on the cohesion of soil in question:

C =	0 ... 7 kN/m^2	clay, soft
	7...15 kN/m^2	clay, semi-stiff
	15...40 kN/m^2	clay, stiff

Based on sufficient test results or experience the tensile capacity of the rock anchor bolts or the fittings (U-bolt) of guys may be calculated using the friction of the anchor bolts in granite-gneiss-basalt bedrock providing also that the bedrock is not broken.

8.7 Structural design

(ncpt) **FI.1 Design documents**

The material, design and construction of concrete foundations shall be according to ENV 1992-1-1 or according to the following national publications:

by 15 Betonirakenteet, RakMK B4
National Building code of Finland - concrete structures

NOTE 1 This publication deals with the limit state analysis, design, execution and methods of construction of reinforced concrete structures.

by 32 Betonirakenteiden säilyvyysohjeet ja käyttöikämitoitus
Durability and service life design of concrete structures

NOTE 2 This publication specifies the durability requirements of concrete and reinforced concrete structures in Finland.

The material, design and construction of steel foundations shall be according to ENV 1993-1-1 or according to the following national publication:

RIL 173 Teräsrakenteet, RakMK B7
National Building code of Finland - steel structures

NOTE 3 This publication deals with the limit state analysis, design, manufacture and quality control of steel structures. It is generally compatible with ENV 1993-1-1.

8.8 Construction and installation

(ncpt) **FI.1 Construction instructions**

The foundation shall be placed deep enough to be prevented from frost heave. Frost penetration depths in Finland are determined in the national publication RIL 121 (see 8.5.1/FI.1 and its Note 1) or in the Project Specification. Concrete structures used in the foundations shall be frost resistant (see 8.5.1/FI.1 and 8.7/FI.1) or as specified in the Project Specification.

9 Conductors and overhead earthwires with or without telecommunication circuits

9.1 Introduction

(ncpt) **FI.1 Maximum conductor temperatures**

The maximum recommended conductor temperatures are defined in Table 9.1/FI.1.

In the calculation of the conductor temperature rise due to short circuit or earth fault current both the total operating time of the over-current or earth fault protection and automatic and manual reclosings have to be taken into account. The conductor cooling in the interval with no current may be allowed for. The assumed conductor temperature before the fault is +40 ^{o}C and the wind speed 0,6 m/s.

(ncpt) **FI.2 Conductor reference stress**

The reference stress of the conductor (EDS) is the stress of a conductor installed in the reference condition (see. 4.2.5/FI.1) after the stress decrease due to creep has ceased.

The reference stress of the conductor shall be chosen in such a way that the mechanical requirements for the conductor are fulfilled in every load case. The stresses due to conductor vibration shall be taken into account when selecting the EDS.

Normally conductor vibration does not cause excessive stresses if the maximum EDS is chosen according to Table 9.1/FI.1. The lower values are meant for small conductors and bimetallic conductors with low steel content.

Table 9.1/FI.1 - Recommended EDS and temperatures of conductors

Conductor type	Max. EDS (N/mm^2)	Max. temperature in normal operation (^oC)	Max. temperature in short circuit (^oC)
AL1/STyz	45 ... 60	80	200
AL2...7/STyz	45 ... 60	80	200
AL1	27	80	160
AL2...7	30 ... 50	80	200
STyz	150 ... 180	80	200
Cu	100	70	200

9.6.2 Partial factor for conductors

(ncpt) **FI.1 Partial factor**

The partial factor applied to the rated tensile strength for all types of conductors shall not be less than γ_M = 1,5.

10 Insulators

10.2 Standard electrical requirements

(ncpt) **FI.1 Typical electrical withstand voltages**

The typical electrical withstand voltages for insulators are given in Table 10.2/FI.1.

Table 10.2/FI.1 - Electrical withstand voltages for insulators

Nominal voltage (kV)	Highest system voltage (kV)	Wet power frequency withstand voltage (kV)	Dry lightning impulse withstand voltage (kV)	Wet switching impulse withstand voltage (kV)
≤ 10	≤ 12	28	75	-
20	24	50	125	-
30	36	70	170	-
45	52	95	250	-
110	123	230	450 (550)	-
220	245	360	750 (850)	-
400	420	-	(1175) 1300 (1425)	(950) 1050 (1175)

The higher values in brackets in Table 10.2/FI.1 are guideline values, which can be applied when aiming at higher safety and operational reliability. In case switching overvoltages are effectively limited the lower values in brackets may be applied.

The withstand voltages for insulators stressed by the phase-to-phase voltage and switching voltages between phases (e.g. transposition string) shall be higher than those given in Table 10.2/FI.1.

The strain insulator of a guy with no protective earthing shall have the wet power frequency withstand voltage equal to the nominal voltage (phase-to-phase voltage) of the system.

The earthing voltage of the strain insulator of an earthed guy shall not exceed 60% of the insulator wet power frequency test voltage.

10.11 Type test requirements

(ncpt) **FI.1 Puncture withstand test**

The puncture withstand test made on insulator units shall be the impulse overvoltage puncture withstand test according to EN 60383-1, 15.2. The test voltage shall be at least twice the 50% flashover voltage of the insulator unit at negative standard lightning impulse 1,2/50 μs in standard atmospheric conditions and in mounting arrangements as given in the a.m. standard.

11 Line equipment - Overhead line fittings

11.6 Mechanical requirements

(ncpt) **FI.1 Operational factors**

The conductor shall be fixed to the clamp in such a way that it cannot slip in the clamp in the case the conductor breaks in the adjacent span.

In case the conductor joint or clamp is subject to substantial tension the breaking strength of the joint shall normally not be less than 90 % of the rated braking strength of the conductor. If in a special case the breaking strength of the joint does not fulfil the a.m. requirement the allowable stress of the conductor shall be calculated according to the breaking strength of the joint.

The installation of a mid-span tension joint in a crossing span shall be avoided.

11.8 Material selection and specification

(ncpt) **FI.1 Minimum operational temperatures**

When selecting materials for the line fittings the minimum operational temperature - 40 °C shall be taken into account.

11.15 Other components and equipment

(ncpt) **FI.1 Warning signs**

All line supports at voltage 110 kV and above shall be equipped with warning signs for electrical hazards according to ISO 3864 or SFS 6002.

At voltages below 110 kV line supports located near buildings (see 5.4.5.2/FI.1–FI.4) or traffic routes (see 5.4.5.3/FI.1–FI.3) and common structures for high voltage and telecommunication line (see 5.4.5.4/FI.4) shall be equipped with warning signs for electrical hazards according to ISO 3864 or SFS 6002.

In case the overhead line crosses a waterway, the line has to be equipped on the shores in both traffic directions with a sign informing of the maximum allowed mast height. The Finnish Maritime Administration gives detailed instructions of the signing of an overhead line crossing a waterway.

If the line support is equipped with steps or other climbing devices and the use of the steps not higher than 2 m above the ground has not been hindered e.g. by locking, a sign telling about the danger of the line shall be installed near the steps.

If the support is located in a place where people often stay or move the steps or equivalent are not allowed at a height less than 2 m above the ground. The diagonals of a lattice tower are not considered as the steps mentioned afore.

(ncpt) **FI.2 Marking of guys**

The guys shall be marked with yellow/black signs according to SFS 2653 or equivalent on fields and pastures, by roadsides and snowmobile routes.

(ncpt) **FI.3 Aerial warning devices**

The use of aerial warning devices including lights, signs, painting of towers etc. shall be allowed for in the Project Specification.

Annex J Lattice steel towers

J.5.1.2 Flexural torsional buckling

(ncpt) **FI.1 Calculation method**

The profiles of open cross sections shall be checked against torsional flexural buckling according to the standard ANSI/ASCE 10-90 (Design of Lattice Steel Transmission Structures, 1991) or the recommendation ECCS no 39 (Recommendations for Angles in Lattice Transmission Towers, 1985). This is because of the improper specification and insufficient formulation of EN 50341-1 for this subject.

J.6 Buckling length of members

(ncpt) **FI.1 Buckling length factors**

The buckling length factors (boxed values) in chapter J.6 shall be taken from ENV 1993-3-1, subclause 5.7, tables 5.2 and 5.3.

National Normative Aspects (NNA)

for

the UNITED KINGDOM and NORTHERN IRELAND

based on EN 50341-1:2001

Version circulated with corrigendum April 2006.

Contents

Foreword **6**

1 Scope **7**

GB.1 Application 7

2 References, terms and definitions **7**

2.2 List of symbols 7

GB.1 Additional symbols 7

2.3 References 8

GB.1 National statutes 8

GB.2 National normative standards 9

3 Basis of design **9**

3.2.1 GB.1 Basic requirements 9

3.2.2 Reliability of overhead lines 9

GB.1 Reliability levels 9

3.2.5 GB.1 Coordination of strength 9

3.2.6 GB.1 Additional considerations 9

3.3.3 GB.1 Serviceability limit states 9

4 Actions on lines **10**

4.2 Actions, General approach 10

4.2.2 Wind loads 10

GB.1 Basic wind speed 10

GB.2 Wind direction factor 10

GB.3 Terrain roughness factor 10

GB.4 Site reference wind speed 11

GB.5 Variation of wind speed with height 12

GB 5.1 Sites in level terrain 12

GB. 6 Dynamic Pressure 12

GB. 7 Loading on conductors 13

GB.8 Wind loading on insulators 14

GB.9 Wind loading for supports 14

4.2.3 Ice loads 16

GB.1 Basic ice thickness 16

GB.2 Reference ice thickness 16

GB.3 Ice weight 17

4.2.4 Combined Wind and Ice Load 17

GB.1 Ice thickness in conjunction with wind 17

GB.2 Reference ice thickness 17

GB.3 Ice weight 17

4.2.5 Temperature effects 18
GB.1 Temperature effects 18
4.2.6 Construction and maintenance loads 18
GB.1 General 18
GB.2 Loads related to weight of linesmen 18
4.2.7 Security loadings 18
GB.1 Security loadings (Failure containment or Broken Wire Conditions) 18
4.2.9 Other special loads 18
GB.1 Other special loads 18
4.2.10 Standard load cases for General Approach 19
4.2.11 Partial factors for actions for General Approach 20
GB.1 Partial factors for actions for General approach 20
4.3.2 GB.1 Wind loads 22
4.3.3 GB.1 Ice loads 22
4.3.4 GB.1 Combined wind and ice 22
4.3.5 GB.1 Temperature effects 23
4.3.6 GB.1 Construction and maintenance loads 23
4.3.7 GB.1 Security loads 23
4.3.10.3 GB.1 Conductor tension load cases 23
4.3.11 GB.1 Partial factors for actions, Empirical Approach 24
5 Electrical requirements 25
5.2.1 Normal current 25
5.2.2 Short circuit current 25
5.3.5.3 GB.1 Empirical method 26
5.4 Internal and external clearances 26
GB.1 External clearances 26
5.4.2.2.1 Load cases for calculation of clearances 26
GB.1 Calculation of clearances to support 26
5.4.2.2.2 GB.1 Ice load for determination of electrical clearances 27
5.4.2.2.3 GB.1 Wind load for determination of electrical clearances 27
5.4.2.2.4 GB.1Combined wind and ice loads for determination of electrical clearances 27
5.4.3 GB.1Clearances within the span and at the tower 27
5.4.3.1 Clearances within the span 27
GB.1 Phase separation 27
5.4.5.3 GB.1 Minimum clearances to line crossing roads, railways and navigable waterways 28
5.4.5.4 GB.1 Other power lines or overhead telecommunication lines 28
5.4.5.5 GB.1 Minimum clearances to recreational areas 28
5.5.2.3 GB.1 Noise limit 28
5.5.3 GB.1 Corona loss 28
5.6.1 GB.1 Electrical and magnetic fields 28

6 Earthing Systems 28
6.2.2.1 Earth electrodes 28
GB.1 Foundations 28
6.2.4 GB.1 Dimensioning with regard to human safety 28
6.4 Earthing measures against lightning effects 28

7 Supports 29
7.1 Initial design considerations 29
GB.1 Design Basis for steelwork 29
7.2 Materials 29
7.2.6 Timber 29
GB.1 ENV 1995-1-1 29
7.3 Lattice steel towers 29
GB.1 Design strength 29
7.4 Steel poles 30
7.4.5 Ultimate limit states 30
GB.1 Design of pole supports 30
GB.2 Internal forces 30
7.5 Timber poles 30
7.5.1 General 30
GB.1 ENV 1995-1-1 30
7.5.5 Ultimate limit states 31
GB.1 Design of pole supports 31
GB.2 Internal forces 31
GB.3 Pole straightness 31
GB.4 Resistance of members 31
7.7 Guyed structures 32
GB.1 Empirical Design of pole supports 32

8. Foundations 32
8.4 Loads acting on the foundation 32
GB.1 Wood pole foundation design 32
8.5 GB.1 Geotechnical design 32
8.5.3 GB.1 Geotechnical design by prescriptive measures 32
8.6 GB.1 Loading tests 32
8.7 Structural design 32
GB. 1 Support/Foundation Interconnection 32
8.8 GB.1 Construction and installation 32

9 Conductor and overhead earth wires (ground wires) with or without telecommunications circuits 33
GB.1 Telecommunication circuits 33

10 Insulators 33
10.10 Characteristics and dimensions of insulators 33
GB.1 Inclusion of 28B coupling 33
11 Line equipment – overhead line fittings 34
11.9 Characteristics and dimensions of insulator fittings 34
GB.1 Inclusion of 28B coupling 34
12 Quality assurance, checks and taking-over 34

Figures 1 to 13 36

Foreword

1. The British National Committee is identified by the following address:

   British Standards Institution
   389 Chiswick High Road
   London W4 4AL

   Tel: + 44 20 8996 9000
   Fax: + 44 20 8996 7799
   email: info@bsi.org.uk

   Attention: Secretary of PEL 11 "Overhead lines"

2. The British National Committee has prepared this NNA (part 3-9 of EN 50341 and part 3-9 of EN 50423) listing the GB National Normative Aspects under its sole responsibility and duly passed this document through the CENELEC and CLC/TC 11 procedures.

3. This combined NNA is normative in GB and informative for other countries.

4. This document shall be read in conjunction with EN 50341-1 and EN 50423-1. All clause numbers used in this combined NNA correspond to those of EN 50341-1 and EN 50423-1. Specific sub clauses that are prefixed GB are to be read as amendments to the relevant text in EN 50341-1 and/or EN 50423-1. Any necessary clarification regarding the application of this combined NNA in conjunction with EN 50423-1/ EN 50341-1 shall be referred to the British NC who will, in co-operation with CLC/TC 11 clarify the requirements. Where no reference is made in this combined NNA to a specific subclause, then EN 50341-1/EN 50423-1 shall apply.

5. In the case of “boxed values” defined in EN 50341-1/EN 50423-1, amended values (if any), which are defined in this combined NNA, shall be taken into account in GB and Northern Ireland.

6. The British NC declares in accordance with clause 3.1 of EN 50341-1/ EN 50423-1 that this combined NNA follows both the “General approach” and the “Empirical approach”. The specific design approach to be used shall be specified in the Project Specification.

7. The GB and Northern Ireland statutes relating to overhead electrical lines exceeding A.C. 1 kV are listed in 2.3.

Clause National regulation
(type)

1 Scope

GB.1 Application

(ncpt)

This combined NNA is only applicable to all new overhead lines above A.C. 1kV.

This Euronorm is only applicable to new overhead lines and shall not be applied to maintenance, reconductoring, tee-offs, extensions or diversions to existing overhead lines unless specifically required by the Project Specification.

For details of the application of this standard for overhead lines constructed with covered conductor refer to the Project Specification.

For details of the application of this standard to telecommunication systems involving optical fibres either incorporated in or wrapped around earthwires or conductors or suspended from overhead line supports, reference should be made to the Project Specification.

2 References, terms and definitions

2.2 List of symbols

GB.1 Additional symbols

(ncpt)

A_s	either, for a lattice tower, the total area projected normal to the face of the members in the tower face for the panel considered, or for a pole, the total projected area of the panel considered
A_f	total projected area of the flat-sided members in the face of a lattice tower for the panel considered.
A_c	total projected area of the circular-section members in sub-critical regimes in the face of a lattice tower for the panels in sub-critical regimes
$A_{c'}$	total projected area of the circular-section members in the face in supercritical regimes
A_I	is the projected area of the insulator and fittings in the direction normal to the wind
a	altitude in metres above sea level of the conductor
C_c	overall drag coefficient of conductor
C_N	overall drag (pressure) coefficient
C_I	is the drag coefficient for the insulator and fittings, which may generally be taken as 1,2
D_c	diameter of the conductor (mm)
G_c	gust response factor of conductor
G_B	basic gust response factor for the support
G_I	is the gust factor for the insulator and fittings
H	overall tower height (m)
h_e	effective height of surface obstructions
K_L	length factor of conductor span
K_Z	height factor of conductor
K_d	wind direction factor.
K_R	terrain roughness factor
K_{com}	combination factor
K_θ	wind incidence factor for the tower face
K_c	shape factor
L	length of conductor span, m
N_c	number of phases and earthwires

Clause National regulation
(type)

P_{IW}	is the maximum load due to wind on insulators and fittings in the direction of the wind
P_{TW}	max load in direction of wind due to wind on a support for the panel considered
p_{cw}	wind pressure per unit length of conductor
q_z	dynamic pressure at height, z, N/m^2
r_B	basic radial thickness of ice, mm
r_o	radial ice thickness in mm in the absence of wind
r_r	reference ice thickness, mm
r_W	radial ice thickness in mm in conjunction with wind
$\overline{V_B}$	basic wind speed, m/s
$\overline{V_R}$	site reference wind speed, m/s
$\overline{V_Z}$	site reference wind speed at height z, m/s
Z_c	mean height of conductor above ground, m/s
Z_0	terrain aerodynamic roughness factor, m
z	height above ground, m
α	power law index of variation of speed with height
γ_v	partial safety factor on wind speed and ice thickness (partial factors on actions)
Ψ	angle of wind incidence to the longitudinal axis of the conductor
φ	solidity ratio
ρa	density of air (1,22 kg/m^3)
γ_m	partial factor on strength of structural materials
Θ	angle of incidence of the wind to the normal to the windward face in plan
ϕ	ratio of the total projected area within a panel height of the structural components in the windward frame.
γ_{dl}	partial factors on permanent actions
ν	kinematic viscosity of air (1,46 x 10E-5 m²/s)
Λ	non-dimensional slenderness parameter
$\overline{\Lambda}$	effective non-dimensional slenderness parameter
	slenderness ratio – effective length divided by the radius of gyration

2.3 References

GB.1 National statutes

(A-dev)

Reference	*Name and Date of GB and NI Statute*
	Electricity Act 1989, Chapter 29
	Health and Safety at Work Act 1974 and subsequent amendments
SI 635	The Electricity at Work Regulations 1989 (Northern Ireland) 1991
SI 2035	The Overhead Lines (Exemption) Regulations 1990
SI 2665	The Electricity Safety, Quality and Continuity Regulations 2002
SI 3074	The Overhead Lines (Exemption) Regulations 1992
SI 3140	The Construction (Design & Management) Regulations 1994
SI 231(NI)	Electricity (Northern Ireland) Order 1992
SR 142	The Construction (Design & Management) (Amendment) Regulations (Northern Ireland) 2001
SR 209	The Construction (Design & Management) Regulations (Northern Ireland) 1995
SR 536	Electricity Supply Industry Regulations (Northern Ireland) 1991
SR 21	Electricity Supply (Amendment) Regulations (Northern Ireland) 1993
SI 1039 (NI9)	Health and Safety at Work (Northern Ireland) Order 1978
SI 2448 (S.165)	The Electricity Act 1989 (Scotland)

Clause National regulation
(type)

GB.2 National normative standards

(ncpt)

BS ISO 20898-1:1992 Part 1 Bolts, screws and studs
BS 8100 Part 1 Lattice Towers and Masts: Part 1 Code of practice for loading
BS 3288:1989 Insulators and conductor fittings for overhead power lines Parts 3 and 4
BS 5950 Part 1 Structural Use of Steelwork in Building Part 1: Code of Practice for Design
BS 7354:1990 Design of high-voltage open-terminal stations
ECCS 39 Recommendations for angles in lattice transmission towers
Electricity Association Technical Report (EATR) 111 - High Voltage Single Circuit Overhead Lines on Wood Poles (1991)

3 Basis of design

3.2.1 GB1. Basic requirements

(ncpt)

The General approach shall be adopted for all new overhead lines supported on steel poles or lattice steel towers.

For overhead lines supported on timber poles, the project specification shall specify either a General or an Empirical approach.

3.2.2 Reliability of overhead lines

(ncpt)

GB.1 Reliability levels

The partial coefficients to be used for the reliability levels are shown in Table 4.2.8(a)/GB.1. The required reliability level shall be stated in the Project Specification. For temporary loading conditions reduced reliability levels may be specified.

3.2.5 GB.1 Coordination of strength

(ncpt)

The required degree of strength coordination shall be stated in the Project Specification.

3.2.6 GB.1 Additional considerations

(ncpt)

Higher partial factors than those shown within this NNA may be specified in the Project Specification. Any additional considerations shall also be stated in the Project Specification.

3.3.3 GB.1 Serviceability limit states

(ncpt)

These shall be defined in the Project Specification.

Clause (type) National regulation

4 Actions on lines

4.2 Actions, General approach

4.2.2 Wind loads
(snc)

This clause replaces 4.2.2.1 to 4.2.2.4.4 in EN 50341-1 and EN 50423-1.

GB.1 Basic wind speed

The basic wind speed, $\overline{V_B}$, shall be obtained from the wind maps in BS 8100 Part 1 which are based on the GB Meteorological Office data. The data is presented as the maximum mean hourly wind speed independent of direction, at a height 10 m above level ground in basic open terrain category III (see table 4.2.2(a)/GB), at the site of the structure. The data has an annual probability of occurrence of 0,02 (i.e. a return period of 50 years). The appropriate map for the GB is shown in Figure 1 adjusted for sea level. For each 100 m above mean sea level (AMSL), the map value shall be increased by 10% to obtain $\overline{V_B}$ at 10 m above the general ground level.

GB.2 Wind direction factor

Overhead lines have resistance to the wind, which varies with wind direction. Allowance should be made for the variation of wind speed with direction by use of the factor K_d, which shall be derived as follows:

a) For a site in the GB, K_d may be obtained from Figure 2, subject to the following:

   1) K_d = 1,0 for sites within 16 km of the East Coast of England and Scotland for ice-free conditions.
   2) K_d is not greater than 0,85 when considering combinations of wind and ice.
   3) K_d appropriate to any required wind direction should be taken as that within +/– 30° of the direction assumed, in order to allow for local deviations at particular sites.
   4) Consideration shall be given to the use of an increased value of K_d where the terrain adjacent to the site contains steep-sided valleys or excavations, which may cause funnelling of the wind from certain directions.

b) K_d shall be derived from Figure 2, or from the statistical analysis of records of wind direction taken at the site, using the guidance in Appendix A of BS 8100.

GB.3 Terrain roughness factor

The terrain roughness factor, K_R, which allows for the general roughness of the ground at the site and its environs, shall be derived in either of the following ways.

a) From table 4.2.2 (a)/GB, appropriate to the category of the site, consideration should be given to foreseeable alterations to the environs of the site, which could change the terrain characteristics. The site reference wind speed $\overline{V_r}$, shall be assumed to apply at a level above ground of (10 + h_e) metres where h_e is the effective height of surface obstructions appropriate to the terrain as given in table 4.2.2(a)/GB.

b) K_R may be derived from the statistical analysis of records taken at the site.

Clause National regulation
(type)

Table 4.2.2(a)/GB Terrain characteristics

Category	Terrain description	Terrain roughness factor K_R	Power law index of variation of wind speed with height α	Effective height h_e m
I (z_o = 0,003 m)	Snow covered flat or rolling ground without obstructions; large flat areas of tarmac; flat coastal areas with off-sea wind	1,20	0,125	0
II (z_o = 0,01 m)	Flat grassland, parkland or bare soil, without hedges and with very few isolated obstructions	1,10	0,14	0
III (z_o = 0,03 m)	Basic open terrain, typical GB farmland, nearly flat or gently undulating countryside, fields with crops, fences or low hedges, or isolated trees	1,00	0,165	0
IV (z_o = 0,10 m)	Farmland with frequent high hedges, occasional small farm structures, houses or trees	0,86	0,190	2
V (z_o = 0,30 m)	Dense woodland, domestic housing typically covering 10% to 20% of the plan area	0,72	0,230	10

NOTE 1 Z_o is the terrain aerodynamic roughness parameter
NOTE 2 The lower (smoother) of any two possible categories should be adopted where the environs of the site are difficult to define or may change
NOTE 3 The terrain description should apply to environs extending several kilometres upwind from the site
NOTE 4 Higher (rougher) categories that occur within only a few kilometres upwind from the site, may not be sufficiently extensive to develop an equilibrium wind profile and should not generally be used for determining the terrain category
NOTE 5 In urban areas (z_o = 0,8m) where towers rise above the general level of the surrounding buildings, category V should be adopted. Specialist advice should be sought where considerations of local accelerations from adjacent high buildings could affect the tower design,
NOTE 6 Significant increases in wind speed may occur at sites located in mountainous or hilly country due to the topographical effects. Examples are:-
a) Sites on the tops of hills or ridges of height greater than one twentieth of the horizontal distance from the hill top to the general level of surrounding terrain,
b) Sites in the vicinity of hills with slopes greater than 30 degrees.
c) Sites where wind funnelling may occur.
BS8100 Pt 1 gives guidance on case a). In other cases the advice of a specialist should be obtained.

GB.4 Site reference wind speed

The site reference wind speed, $\overline{V_r}$, is defined as the mean hourly wind speed at the site at a level of 10 m above the effective height of surface obstructions appropriate to the site terrain (see Table 4.2.2(a)/GB.

It is given by:

$$\overline{V_r} = \gamma_v K_d K_R \overline{V_B}$$

where

$\overline{V_B}$ is the basic wind speed, determined in accordance with Figure 1
γ_v is the partial safety factor on wind speed to be determined from table 4.2.8
K_d is the wind direction factor.
K_R is the terrain roughness factor, determined from table 4.2.2(a)/GB

Clause National regulation
(type)

GB.5 Variation of wind speed with height

GB 5.1 Sites in level terrain

For all sites in level terrain, the mean wind speed, $\overline{V_z}$, at a height z metres above the site ground level shall be taken as:

$$\overline{V_z} = \overline{V_r}\left(\frac{z - h_e}{10}\right)^{\alpha} \quad for\ z \geq 10 + h_e$$

$$\overline{V_z} = \overline{Vr}\left[\left(\frac{0{,}25}{10 + h_e}\right)z + 0{,}75\right] \quad for\ z < 10 + h_e$$

where

α is the power law index of variation of speed with height to be obtained from Table 4.2.2(a)/GB, appropriate to the site terrain.

h_e is the effective height of surface obstructions to be obtained from Table 4.2.2(a)/GB, appropriate to the site terrain.

NOTE: For mountainous or hilly terrain, reference should be made to BS8100: Part 1. Wind close to obstruction level ($z < 10+h_e$) may be subject to significant variation due to local features. Care should be exercised when evaluating wind effects for towers situated close to the base of tall buildings.

GB.6 Dynamic pressure

The dynamic pressure, q_z at height z shall be taken as:-

$$q_z = \left(\frac{\rho_a}{2}\right)\overline{V_z}^2$$

where

ρ_a is the density of air, which may be taken as 1,22 kg/m^3 for Great Britain.

NOTE z may be taken as the mean height of all the conductors under swung condition when calculating conductor loadings or the mean height of the tower panel being considered when calculating tower wind loadings.

Clause National regulation
(type)

GB. 7 Loading on conductors

NOTE: The term 'conductors' shall include all types of conductors or cables suspended from towers including phase conductors, earthwires, optical fibre cables, etc.

The total load per unit length on a conductor caused by wind, p_{cw}, shall be assumed to act in a direction normal to the conductor and shall be taken as:-

$$p_{CW} = q_z D_c C_c (1 + G_c) \sin^2 \psi$$

where

D_c is the conductor diameter

C_c is the overall drag coefficient for the conductor, appropriate to the effective Reynold's number, the values of which are given in table 4.2.2(b)/GB for both iced and ice-free conditions.

G_C is the conductor gust response factor to be taken as:

$$G_C = K_L K_z$$

K_L is a length factor given in Figure 4 or by:

$K_L = \{ 2/s + 2/s^2 (e^{-s} - 1)\}^{0,5}$

where $s = (L/50,4) (10/Z_c)^{\alpha}$ and L = wind span, Z_c is the mean height of the conductor above ground level under swung conditions. For spans with suspension insulators the set length shall be taken into account. α is the power law index of wind speed variation with height.

K_z is a conductor height factor to be obtained from Figure 5, as appropriate to the terrain roughness or by:

$K_Z = 2,121(10/Z_c)^{\alpha} \{(1,6/K_R) - 1\}$, where K_R is the terrain roughness factor

ψ is the angle of wind incidence to the conductor.

NOTE Wind resistance in the direction parallel to the conductor may generally be ignored.

Loading on towers caused by the direct effect of gusts on conductors, shall be calculated using a value of K_L based on the wind span (half sum of adjacent spans).

In the calculation of conductor tension and the resulting load on towers, however, K_L may be based on a greater length, which shall be stated in the Project Specification.

Clause National regulation
(type)

Table 4.2.2(b)/GB Typical drag (pressure) coefficients for individual components

Member type	Effective Reynold's number $R_e = 1{,}5\ \overline{V_Z}\ \text{Sin}\ \Psi D/\nu$	Drag (pressure) coefficient, C_N	
		Ice free	Iced
Circular sections and smooth wire	$\leq 2 \times 10^5$	1,2	1,2
	4×10^5	0,6	1,0
	$> 10 \times 10^5$	0,7	1,0
Conductor locked coil ropes, spiral steel strand with more than seven wires	*Ice free* $\leq 6 \times 10^4$ $\geq 10^5$	 1,2 0,9	 - -
	Iced $\leq 1 \times 10^5$ $\geq 2 \times 10^5$	 - -	 1,25 1,0
Thick stranded cable, e.g small wire ropes, round wire ropes, spiral steel strand with seven wires only	*Ice free* $\leq 4 \times 10^4$ $>4 \times 10^4$	 1,3 1,1	 - -
	Iced $\leq 1 \times 10^5$ $\geq 2 \times 10^5$	 - -	 1,25 1,0
Flat sided sections and plates	All values	2,0	2,0

NOTE 1 For intermediate values of R_e, C_N should be obtained by linear interpolation
NOTE 2 D is the member diameter in m
$\overline{V_Z}$ is the factored wind speed relevant to the height z from ground level to the centre of the member, in m/s
ν is the kinematic viscosity of air, $1{,}46 \times 10^{-5}$ m^2/s

GB.8 Wind loading on insulators

The total load on insulators and fittings shall be taken as:-

$$P_{IW} = q_z A_I C_I (I + G_I)$$

where

P_{IW} is the maximum load due to wind on insulators and fittings in the direction of the wind
A_I is the projected area of the insulators and fittings in the direction normal to the wind
C_I is the drag coefficient for the insulators and fittings, which may generally be taken as 1,2
G_I is the gust factor for the insulators and fittings taken from Figure 7, taking the mean height of the insulators and fittings on the support as the value of H.

GB.9 Wind loading for supports

The procedures given below are suitable for application to the design of normal height, self-supporting structures.

For particularly tall towers, such as river crossings, or others where the loading is dominated by the wind on the structure, reference shall be made to BS 8100 Part 1 for guidance on the treatment of wind loading on the support. This also applies to structures, which may be particularly susceptible to dynamic wind effects.

For the purposes of calculating wind resistance, a support shall be divided into a number of panels.

$$P_{TW} = q_z A_s C_N (1 + K_{com} \cdot G_B) K_\theta$$

The maximum wind load in the direction of the wind for each panel of the body, P_{TW}, shall be ideally taken as acting at the level of the centre of area of the faces including ancillaries (if present) within a panel height, but in most cases it will be sufficiently accurate to assume that 50% of the load acts at the top of the panel and 50% at the bottom.

Clause National regulation
(type)

where:

A_s is, either for lattice towers, the total area projected normal to the face of the members in the tower face, for the panel considered, ignoring projections of bracing members from faces parallel to the wind direction, plan bracings, and hip bracings, or for poles, the face area of the pole over the panel considered.

C_N is the overall drag (pressure) coefficient, which for lattice towers is dependent on the solidity ratio, ϕ, (see Figure 6), and shall be determined in accordance with Figure 3.
For poles, the drag coefficient shall be determined from table 4.2.2(b)/GB.

G_B is the basic gust response factor for the support, depending on the height, H, of the support and shall be determined from Figure 7.

K_θ For lattice towers, the wind incidence factor for the tower face, dependent on the wind incidence angle for the tower face θ, shall be calculated from the formula given in Figure 6.
For poles of circular or approximately circular cross-section, a value of 1,0 shall be taken.

K_{com} is a combination factor to take account of the improbability of maximum gust loading on both conductors and towers occurring simultaneously. It may be taken conservatively as 1,0 in all cases. It shall be taken as 1,0 for the purposes of design of elements where all or most of the loading is due to tower wind.

NOTE The design of conventional lattice transmission towers is generally dominated by the loads on the conductors. The critical loading for bracings is usually caused by failure containment, single circuit strung (double circuit towers) or terminal loading, in which the conductor loading predominates. Exceptions to this statement are the design of the bracings in the lower panels of tall crossing towers, where the majority of the loading will be due to tower wind and K_{com} should be taken as 1,0. If it is found necessary to calculate bending moments caused by wind loads on individual members, as specified in clause 7.3.5.2.1(5) in EN 50341-1, then K_{com} shall be taken as 1,0.

The method should not be adopted for guyed structures.

For the design of all tower elements except those where all or the majority of the loading is due to wind on the towers, K_{com} should be calculated from:

$$K_{com} = (1 / R_G)\,\{(1 + 1{,}8\,R_G^{\,2})^{0,5} - 1\}$$

where $R_G = (G_B \,.\, OTM_{TW}) / (G_C \,.\, OTM_C)$

OTM_C is the overturning moment about the base of the tower due to mean hourly wind loads on the conductors, earthwires , insulators and fittings, but excluding the effects of the conductor and earthwire tensions.

OTM_{TW} is the overturning moment about the base of the tower due to mean hourly wind load on the tower.

Table 4.2.2(c)/GB.1 Table of values for K_{com}

R_G	0,05	0,10	0,15	0,20	0,25	0,30	0,35	0,40	0,45	0,50
K_{com}	0,04	0,09	0,13	0,18	0,22	0,26	0,30	0,34	0,37	0,41
R_G	0,55	0,60	0,65	0,70	0,75	0,80	0,85	0,90	0,95	1,00
K_{com}	0,44	0,47	0,50	0,53	0,56	0,58	0,61	0,63	0,65	0,67
R_G	1,05	1,10	1,15	1,20	1,25	1,30	1,35	1,40	1,45	1,50
K_{com}	0,69	0,71	0,73	0,75	0,76	0,78	0,79	0,81	0,82	0,83
R_G	1,60	1,70	1,80	1,90	2,00	2,10	2,20	2,30	2,40	2,50
K_{com}	0,86	0,88	0,90	0,91	0,93	0,95	0,96	0,98	0,99	1,00

Intermediate values may be obtained by linear interpolation

NOTE 1 In practice approximate estimates for the mean overturning moments may be used to obtain R_G with adequate accuracy. However, overturning moments should take account of the wind direction i.e K_{com} is a function of K_θ

NOTE 2 For asymmetric towers, triangular towers, or those carrying large or numerous ancillaries (in addition to conductors), reference should be made to BS 8100.

Clause National regulation
(type)

As an alternative to the above procedures, design may be based on tests on wind tunnel models under conditions simulating those appropriate to the site and within the range of predicted reference wind speeds in smooth flow.

4.2.3 Ice loads
(snc)

This clause replaces 4.2.3.1 to 4.2.4.5 in EN 50341-1.

GB.1 Basic ice thickness

Modified design values for ice thickness, ice density, or the wind speed occurring simultaneously with ice loading may be specified in the Project Specification, and may be either more or less onerous than the values given below. Any such modified values shall be supported by local experience gained over approximately 50 years or more of operation of overhead line systems in the areas concerned.

GB.1.1 Ice thickness in the absence of wind

The basic ice thickness, r_B in the absence of wind on conductors for the GB, should be taken as:

$$r_B = k_l \left[r_o + \left(\frac{a - 200}{25} \right) \right] \text{ but not less than } k_l\, r_o$$

where:

k_l is a coefficient that is equal to:-

$$\left(\frac{2}{3} + \frac{4}{D_c} \right) \text{ but not more than 1,2}$$

where D_c is the diameter of the conductor (in mm)

a is the altitude in metres above sea level of the conductor

r_o is the radial ice thickness in mm in the absence of wind shall be obtained from Figure 8 , appropriate to the position of the site. Alternatively, r_o shall be derived from a statistical analysis assuming an extreme distribution based on records of the annual maximum thickness of ice formation on components of form and size similar to those to be used in the tower or its attachments at the latitude and altitude of the site and having an annual probability of occurrence of 0,02.

NOTE 1 For the calculation of ice thickness on tower members, a similar procedure shall be adopted, assuming k_l=1,0 for flat sided members, and a = height of tower top above sea level.

GB.2 Reference ice thickness

The reference ice thickness, r_r , to be considered for design shall be taken as:

$$r_r = \gamma_v K_c r_B$$

where:

γ_v is the partial safety factor on ice thickness to be determined from table 4.2.8.

r_B is the basic radial thickness of ice, determined as above.

K_c is a shape factor, which should be taken as :

$$\frac{N_c + 0{,}3}{1{,}3\, N_c}$$

where N_c is the number of phases and earthwires

K_c = 1,0 for tower members

Clause National regulation
(type)

GB.3 Ice weight

The weight of ice deposited shall be calculated, assuming a uniform coating of ice of thickness r_r , and the unit weight of ice, in the absence of wind should be taken as 5 kN/m^3.

NOTE Ice thickness and density may be subject to maximum and minimum values, which shall be specified in the Project Specification.

4.2.4 Combined Wind and Ice Load
(snc)

GB.1 Ice thickness in conjunction with wind

The basic ice thickness, r_B , in conjunction with wind, on conductors for the GB, shall be taken as:

$$r_B = k_l \left[r_w + \left(\frac{a - 200}{25} \right) \right]$$

But not less than $k_l \, r_w$, where:

k_l and a are as defined in ice only case.

r_W is the radial ice thickness in mm in conjunction with wind, to be obtained from Figure 8 , appropriate to the position of the site. Alternatively, r_W may be derived from records, having an annual probability of occurrence of 0,5.

GB.2 Reference ice thickness

The reference ice thickness, r_r , to be considered for design should be taken as:

$$r_r = \gamma_v K_c r_B$$

where:

γ_v is the partial safety factor on ice thickness to be determined from table 4.2.8.

r_B is the basic radial thickness of ice, determined as above

K_c is a shape factor, which should be taken as :

$\frac{N_c + 0{,}3}{1{,}3 N_c}$ where N_c is the number of phases and earthwires.

K_c = 1,0 for tower members

NOTE: Ice thickness and density may be subject to maximum and minimum values, which shall be specified in the Project Specification.

GB.3 Ice weight

The weight of ice deposited shall be calculated assuming a uniform coating of ice of thickness, r_r , and the unit weight of ice shall be based on knowledge of local environmental factors, using the values from EN 50341-1 Table 4.2.6. The minimum value used shall be 5 kN/m³. Wind speeds acting simultaneously with ice can be assumed to be 80% of the high wind condition values. A maximum value for the direction factor, K_d, of 0,85 should also be applied under this condition. Ice thickness is calculated as above. Drag coefficients for iced conductors are given in table 4.2.2(b)/GB.

Clause National regulation
(type)

4.2.5 Temperature effects
(snc)

GB.1 Temperature effects

(a) Minimum temperature, with no other climatic load is not a critical loading condition in the GB and need not be considered.
(b) The normal ambient temperature for extreme wind speed conditions in GB shall be assumed to be 0°C.
(c) A reduced wind speed combined with a minimum temperature condition is not a critical loading condition in GB and need not be considered.
(d) The temperature to be considered for both icing in still air and combined wind and ice in GB shall be assumed to be -10°C.

4.2.6 Construction and maintenance loads
(ncpt)

GB.1 General

Details of construction and maintenance loads shall be provided in the Project Specification.

GB.2 Loads related to weight of linesmen

Design loadings for walkways and/or working platforms when installed shall be defined in the Project Specification.

4.2.7 Security loadings
(ncpt)

GB.1 Security loadings (Failure containment or Broken Wire Conditions)

Towers shall be designed to resist the torsional or longitudinal loads, which would be generated by combinations of broken conductor(s), and/or earthwires.

Full details of failure containment conditions shall be given in the Project Specification, which will specify the following:

1) The combinations of conductors and earthwires, which shall be considered to be broken simultaneously.
2) The basis for calculating the tensions in the conductors and earthwire or, alternatively, nominal values to be assumed for the tensions.
3) Values to be assumed for the alleviation factor, J, normally taken as 0,7 for conductors on suspension towers and 1,0 for tension towers and earthwires on suspension towers.
4) The type of climatic loadings to be assumed to be acting simultaneously with the broken conductors, and the return periods or partial load factors to be adopted.

NOTE Security loadings need not be considered for timber poles and other types of support carrying overhead lines at voltages above 1 kV. See Project Specification.

4.2.9 Other special loads
(snc)

GB.1 Other special loads

Where it is necessary to consider avalanches, creeping snow or earthquakes the method of calculation shall be defined in the Project Specification.

Clause National regulation
(type)

4.2.10 Standard load cases for General Approach
(ncpt)

Table 4.2.7 in EN 50341-1shall be replaced by Table 4.2.10/GB.1.

Table 4.2.10/GB.1 Standard load cases for General Approach

Load case	Load as per sub clause	Conditions	Remarks
1a	4.2.2	Extreme wind load, all angles of wind incidence which may be critical for particular elements, are to be considered.	
1b	4.2.2	Wind load at a minimum temperature	Not critical for GB
2a	4.2.3	Uniform ice loads on all spans to be considered.	Unit weight of ice 5 kN/m^3
2b	4.2.3	Uniform ice loads, transversal bending.	Not critical for GB
2c	4.2.3	Unbalanced ice loads, longitudinal bending.	Not critical for GB
2d	4.2.3	Uniform ice loads, torsional bending.	Not critical for GB
3	4.2.4	Combined wind and ice. Uniform ice loading on all spans should be considered. All angles of wind incidence, which may be critical for particular elements to be considered.	Minimum unit weight of ice 5 kN/m^3
4	4.2.6	Construction and maintenance loads.	See Project Specification
5a	4.2.7	Security loads, torsional loads.	See Project Specification
5b	4.2.7	Security loads, longitudinal loads.	See Project Specification

Clause National regulation
(type)

4.2.11 Partial factors for actions for General Approach
(ncpt)

GB.1 Partial factors for actions for General approach

Table 4.2.8 in EN 50341-1 shall be replaced by Table 4.2.8(a)/GB.1

Table 4.2.8(a)/GB.1 Partial factors and combination factors, ultimate limit states
(ncpt)

Action (Load)	Symbol	Reliability level		
		1	2	3
Variable actions: *Climatic loads* Wind load (without ice)	γ_v on wind speed	1,0	1,1	1,2
Combined wind and ice	γ_v on ice thickness r_w ,and 0,8 γ_v on wind speed, with a maximum value of 0,85 for K_d (Direction Coefficient).	1,0	1,1	1,2
Heavy ice load (without wind)	γ_v on ice thickness r_o	1,0	1,1	1,2
Safety loads Maintenance and construction loads (see note)		1,5 on static loads 2,0 on conductor tension when conductors are being pulled by powered winches, etc.		
Permanent actions: Self weight	γ_{DL}	The more onerous of:- 1,1 or 0,9 (For the calculation of conductor tension, a value of 1,0 is to be used)		
Accidental actions: *Security Loads (4.2.7)*	Longitudinal (specified tension):	In accordance with the Project Specification		
	γ_v for simultaneous climatic loading, combined wind and ice case (if applicable)	In accordance with the Project Specification		

NOTE 1 The loads shall be stated in the Project Specification

NOTE 2 Limits on deflection of structures, and limits on clearances to supports, shall apply to 3-year return wind or wind and ice loadings. These can be approximated by the application of a value of γ_v of 0,75 applied to the 50 year return values.

Clause National regulation
(type)

Table 4.2.11(b)/GB.1 Partial strength factors for overhead line components for General Approach

Component	Part 1 Clause	Material Property	γ_m
Concrete		Compressive concrete strength	1,50
		Yield strength of steel reinforcement	1,15
Steel Lattice Towers	7.3.5.1.1 and 7.3.6.1.1	Resistance of cross sections and of buckling of sections Resistance of net section at bolts	1,10 min.
		Resistance of bolted, riveted and welded connections	1,10 min
Steel poles	7.4.5.1	Resistance of cross-section Resistance of net section at bolt holes Resistance of connection	1,10 min
Timber Poles	7.5.5.1	Body of Timber Pole** Resistance of cross-section, elements and bolted connections	1,00 min
Guyed Structure	7.7.8.1	Resistance of Guys to ultimate strength	1,6 min
Foundations		Refer to Project Specification	
Conductor *	9.6.2	All types	1,25 min
Tension, Suspension, Pin and Post insulator sets *	10.7	All insulators and associated components	1,6 min

NOTES:

* The above partial coefficients shall be applied to the specified mechanical or electro-mechanical failure load of the insulator strings and to the rated tensile strength of a conductor. These coefficients apply only to ceramic (glass and porcelain) insulators: where non-ceramic insulators are to be used the coefficient will be defined in the Project Specification

**The value of γ_m for resistance of poles to be specified in the Project Specification.

The value of γ_m adopted shall be dependent on the quality of design, design checking (which may include testing), material, workmanship, shop inspection, maintenance and inspection in service. (Reference should be made to the Project Specification).

F_{test} shall be specified in the Project Specification and clauses 7.3.8, 7.4.8 and 7.5.7 of EN 50341-1 shall not apply in this NNA

Clause National regulation
(type)

4.3 Actions, Empirical Approach

4.3.2 GB.1 Wind loads
(ncpt)

For supports designed using the Empirical approach the following parameters shall be adopted for use with equations included in 4.3.2 in EN 50341-1.

Table 4.3.2/GB.1 Wind pressures and aerodynamic drag factors

Load condition	Wind pressure (N/m²)		Aerodynamic drag factors	
	q_x	q_c	C_x	C_c
High Wind (no ice)	1740	1740	0,8	1,0
Combined Wind and Ice (Normal altitude)	380	380	1,0	1,0
Combined Wind and Ice (High altitude)	570	570	1,0	1,0
Wind only (no ice)	0	760	-	1,0
Security (broken wire)	380	380	1,0	1,0
NOTE For the leeward (shielded) pole, a shielding factor of 0,5 shall be assumed				

The span factor Gc shall be assumed to be 1,0 for wind span lengths up to 200 m and (0,75L + 30)/L metres for wind span lengths greater than 200 m.

Normal and High altitudes are defined as follows:

Normal altitude: All of GB and Northern Ireland, except Scotland, site altitudes not exceeding 300 m. For Scotland, site altitudes not exceeding 200 m. More onerous requirements may be detailed in the Project Specification.

High altitude: All of GB and Northern Ireland, except Scotland, site altitudes greater than 300 m but not exceeding 500 m. For Scotland, site altitudes greater than 200 m but not exceeding 500 m. For lines at altitudes greater than 500 m, a special consideration should be made as detailed in the Project Specification.

4.3.3 GB.1 Ice loads
(ncpt)

For details of extreme ice thickness and corresponding ice density under still air conditions reference shall be made to the Project Specification. This loading scenario is not considered for wood and steel pole lines following an Empirical design approach.

4.3.4 GB.1 Combined wind and ice
(ncpt)

For wood pole lines with conductors not exceeding 35 mm² copper (or 60 mm² for aluminium-based conductors), the wind only loading case may be used for all altitudes, with no applied ice loading.

For all other lines, the following ice loadings are applicable when additionally subjected to wind:

Normal altitudes	9,5 mm radial thickness
High altitude	12,5 mm radial thickness

A greater radial ice thickness may be defined in the Project Specification. The following unit weights of ice/snow are considered depending on locality and altitude: glaze ice 9 kN/m³, wet snow 8,33 kN/m³ and rime ice 5 kN/m³. The specific unit weight to be used will be detailed in the Project Specification.

Clause National regulation
(type)

4.3.5 GB.1 Temperature effects
(ncpt)

The minimum temperature under wind only and combined wind and ice loadings shall be assumed to be –5,6°C.

4.3.6 GB.1 Construction and maintenance loads
(ncpt)

For details of construction and maintenance loads reference should be made to the Project Specification.

4.3.7 GB.1 Security loads
(ncpt)

For details of security (broken wire) loads reference should be made to the Project Specification. This is not normally considered an issue for wood pole lines following an Empirical design approach.

4.3.10.3 GB.1 Conductor tension load cases
(ncpt)

Table 4.3.10.3/GB.1 Conductor load cases

Load cases	Temperature °C	Load condition
1	-5,6	High Wind (no ice)
2	-5,6	Combined wind and ice (Normal altitude)
3	-5,6	Combined wind and ice (High altitude)
4	-5,6	Wind only (All altitudes - no ice)
5	-5,6	Security (broken wire)
6	-5,6	Construction & Maintenance

4.3.10.4 GB.1 Standard load cases
(ncpt)

For wood pole lines, Loading Cases 2 or 3 as appropriate shall be adopted for the line design. Exceptionally, Load Case 1 may additionally be specified for certain localities. The requirement for this loading will be outlined in the Project Specification.

Load Case 4 in Table 4.3.10.4/GB.1 relates to a wind only loading without ice accretion for small size conductors on wooden poles. This loading has been proven to give satisfactory performance over many years and within many areas of GB and Northern Ireland. Since the acceptability of the loading is dependent on site topography, location, and security of supply, the requirement for its use in a specific environment will be outlined in the Project Specification.

Table 4.3.10.4/GB.1 Standard load cases

Load case	Load condition	Notes
1	High wind (no ice)	As detailed in the Project Specification
2	Combined wind and ice	Normal altitudes
3	Combined wind and ice	High altitudes
4	Wind only (no ice)	Conductor up to 35 mm² copper equivalent area. Wood pole lines - all altitudes
5	Security (broken wire)	As detailed in the Project Specification
6	Construction and Maintenance	As detailed in the Project Specification

Clause National regulation
(type)

4.3.11 GB.1 Partial factors for actions, Empirical Approach
(ncpt)

Table 4.3.11(a)/GB.1 Partial factors for actions, ultimate limit state

Action (load)	Partial factor
Normal load cases – variable actions	
Climatic loads and conductor tension	
High wind (Load case 1)	1,1
Combined wind and ice (Load cases 2 and 3)	2,5 (a)
Wind only (Load case 4)	2,5* (a)
Permanent actions	
Self weight	
High wind (Load case 1)	1,1
Combined wind and ice (Load cases 2 and 3)	2,5 (a)
Wind only (Load case 4)	2,5* (a)
Static cantilever loads (All load cases)	1,0
Exceptional load cases - security (broken wire) loads (Load case 5)	1,3
Construction and maintenance (Load case 6)	1,5 on static loads 2,0 on dynamic loads
* For timber pole supports, wind on the pole is ignored. Note (a). Higher partial factors may be specified in the Project Specification, particularly for intermediate poles. See also Table 4.3.11(b)/GB.1.	

In respect of all intermediate structures on wood pole lines where vertical loads have been ignored, the partial factor for transverse loading shall be increased for increasing declination as indicated in the following Table 4.3.11(b)/GB.1.

Table 4.3.11(b)/GB.1 Partial factors for actions, intermediate pole declination

Action (load)	Partial factor
Declination gradient – climatic loads	
Level – 1: 10 (Load cases 2, 3 and 4)	2,5
>1: 10 – 1: 7,5 (Load cases 2, 3 and 4)	3,0
>1: 7,5 – 1: 5 (Load cases 2, 3 and 4)	3,5

Clause National regulation
(type)

Table 4.3.11(c)/GB.1 Partial strength factors for overhead line components for the Empirical Approach

Component	Part 1 Clause	Material Property	γ_m
Steel Members (Grade S275) used as ancillaries on wood poles	7.1/GB.1 (NNA)	Resistance of cross sections and buckling of sections (based on yield strength)	0,64 (c)
		Resistance of bolted connections: (based on ultimate tensile strength)	
		- Shear	1,33
		- Tension	1,0
		- Bearing	2,0
		Resistance of welded connections (based on yield strength of parent steel)	0,64 (c)
Timber Poles	7.5.5.1	Resistance of body of pole, cross-section, elements and bolted connections (based on mean ultimate strength)	1,0 min. (a)
Guyed Structures	7.7.5.1	Resistance of Guys (based on nominal failing load)	1,0 min.
Foundations	8	Refer to Project Specification	
Conductor	9.6.2	Resistance of conductors (based on nominal breaking load) (d)	
		Combined wind and ice	0,8
		Wind only	1,0
Tension, Suspension, Pin and Post Insulator Sets (b)	10.7	All string components (based on nominal failing load)	1,0 min.

(a) Based on the application of stresses as defined in Clause 7.5.5/GB.4 of this NNA. For wood pole intermediate un-guyed supports, the effects of the vertical loading shall be ignored unless specified in the Project Specification.
(b) The coefficient applies only to ceramic (glass and porcelain) insulators: where non-ceramic insulators are to be used the coefficient will be defined in the Project Specification.
(c) The appropriate γ_m factor has been determined based on the ratio of yield strength to ultimate tensile strength assuming grade S275 steel to EN 10025. For other steel grades, use same ratio to provide γ_m **value**.
(d) The Nominal Breaking Load of conductors is a client defined percentage of the Rated Strength of the conductor as given in the appropriate standard e.g. EN 50182.

The adopted value of γm shall be dependent on the quality of design, design checking (which may include testing), material, workmanship, shop inspection, maintenance and inspection in service. (Reference should be made to the Project Specification).

$F_{test, R}$ shall be specified in the Project Specification and clause 7.5.7 of EN 50341-1 shall not apply in this NNA.

5 Electrical requirements

5.2.1 Normal current
(ncpt)

For details of the design maximum conductor temperature reference shall be made to the Project Specification.

5.2.2 Short circuit current
(ncpt)

The magnitude and duration of short circuit currents for design purposes shall be given in the Project Specification.

Clause National regulation
(type)

5.3.5.3 GB.1 Empirical method
(ncpt)

Clearances D_{el} and D_{pp} shall be as shown in Table 5.3.5.3 /GB.1 below.

Table 5.3.5.3/GB.1 Clearances used in GB

Clearances: practice used in GB [1)]		
Nominal system voltage/BIL[2]	**Basic electrical clearance (phase to earth) D_{el} (m)**	**Phase to phase clearance D_{pp} (m)**
6.6/75	0,5	0,25
11/95	0,5	0,25
33/170	0,5	0,43
66/325	0,7	0,78
132/550/650	1,1	1,4
275/1050/850	2,1	2,4
400/1425/1050	2,8	3,6

Notes: 1) Based on table 3 BS 7354 : The above figures shall be regarded as minimum clearances.
2) BIL – Basic impulse level.
3) SIL – Switching impulse level.

5.4 Internal and external clearances
(A-dev)

GB.1 External clearances

Table 5.4/GB.1 Minimum height above ground of overhead lines (Electricity Safety, Quality and Continuity Regulations 2002)

Nominal voltage	Minimum height above ground, m (see Note)
Not exceeding 33 000 volts:	
a) Over roads accessible to vehicular traffic	5,8
b) All other situations	5,2
Exceeding 33 000 volts but not exceeding 66 000 volts	6,0
Exceeding 66 000 volts but not exceeding 132 000 volts	6,7
Exceeding 132 000 volts but not exceeding 275 000 volts	7,0
Exceeding 275 000 volts but not exceeding 400 000 volts	7,3

Note: The minimum height above ground of any overhead line shall be calculated at the maximum likely temperature of the line conductors.

Minimum external clearances shall be defined in the Project Specification and shall not be less than those specified in Table 5.4/GB.1.

5.4.2.2.1 Load cases for calculation of clearances
(ncpt)

GB.1 Calculation of clearances to support

Wind loads for calculation of clearances according to the General approach shall be calculated by the methods in 4.2.2/GB. For extreme wind conditions the 50-year return period shall be used. For normal electrical clearances, the 3-year return values shall be used. These can be approximated by the application of a value of γ_v of 0,75, applied to the 50-year return wind speed and ice thickness values. Drag coefficients for conductors shall be calculated using the Table 4.2.2(b)/GB or shall be measured in a wind tunnel. Alternative methods of calculating clearances to supports may be adopted providing that these can be shown to be justified by long and satisfactory service history in similar environments. If such alternative methods are adopted they shall be defined in the Project Specification. For wind with ice clearances the method of calculation shall be defined in the Project Specification. For clearances using the Empirical approach the method of calculation shall be defined in the Project Specification.

Clause National regulation
(type)

5.4.2.2.2 GB.1 Ice load for determination of electrical clearances
(ncpt)

For clearances using the Empirical approach the method of calculation shall be defined in the Project Specification.

5.4.2.2.3 GB.1 Wind load for determination of electrical clearances
(ncpt)

For clearances using the Empirical approach the method of calculation shall be defined in the Project Specification.

5.4.2.2.4 GB.1Combined wind and ice loads for determination of electrical clearances
(ncpt)

For clearances using the Empirical approach the method of calculation shall be defined in the Project Specification.

5.4.3 GB.1Clearances within the span and at the tower
(ncpt)

The value of K_1 and the method of calculation shall be defined in the Project Specification

5.4.3.1 Clearances within the span
(ncpt)

GB.1 Phase separation

For all structures designed according to the general approach, phase separation shall be sufficient to prevent clashing of conductors under 3 year return climatic loadings. The maximum differences in wind loading, ice loading, and conductor temperature that should be assumed between adjacent conductors shall be specified in the Project Specification.

For wood pole lines designed using the Empirical approach with conductors exceeding 35 mm² copper equivalent area, the conductor spacing shall comply with the requirements set out in EATR 111 based on the “weather zone” applicable to that area. A weather zone is a geographical area in which the likely mean wind pressure and absolute maximum ice accretion thickness may be described by a numeral and letter respectively. The wind co-ordinate is described in 190N/m² increments, whilst the ice co-ordinate is measured in 10 mm diametric thickness increments for each letter increment (A = 10 mm, B = 20 mm, etc.).

The gust and lull wind pressures shall be 1,832 and 0,546 times the mean wind pressure respectively. The minimum spacing to avoid conductor clash shall be the worst combination of wind and ice, expressed as a straight line between the wind and ice axes, allowing for a withstand factor of 1,10.

Maps of weather zones, shown in 100 m increments of elevation above mean sea level, are reproduced as Figures 9 - 13 inclusive in this NNA.

For wood pole lines at Normal altitudes, the minimum recommended phase separation is defined by weather zone “2B”, whilst for lines at High altitude, the minimum recommended phase separation is defined by weather zone “3C”. Greater phase separations may be required due to the effect of funnelling or for altitudes greater than 500 m. Details of such requirements will be given in the Project Specification.

For lines on wood poles having conductor sizes up to and including 35 mm² copper equivalent area, the phase spacing requirements will be detailed in the Project Specification.

For lines having supports other than wood poles, the requirements of EN 50341 & EN 50423-1 shall apply.

Clause National regulation
(type)

5.4.5.3 GB.1 Minimum clearances to line crossing roads, railways and navigable waterways

(ncpt)

Minor roads shall be defined in the Project Specification. The temperatures for special load cases shall be 20°C below the maximum temperature defined in the Project Specification.

5.4.5.4 GB.1 Other power lines or overhead telecommunication lines

(ncpt)

Overhead line structures will be spaced to prevent a rise of earth potential of the higher voltage line affecting the lower voltage line. Also, the clearances between different overhead line circuits, either on the same structure or on adjacent separate structures, may be increased to allow safe working on one line circuit with the other circuit remaining live. Details of required circuit separation distances will be given in the Project Specification.

5.4.5.5 GB.1 Minimum clearances to recreational areas

(ncpt)

The minimum clearances will be specified in the Project Specification.

5.5.2.3 GB.1 Noise limit

(ncpt)

For details of the conductor system required to meet acceptable levels of audible noise refer to the Project Specification.

5.5.3 GB.1 Corona loss

(ncpt)

This is not normally a design consideration in GB. Where required, the design parameters will be specified in the Project Specification.

5.6.1 GB.1 Electrical and magnetic fields

(ncpt)

The limiting values for electrical and magnetic fields shall be specified in the Project Specification.

6 Earthing Systems

6.2.2.1 Earth electrodes

(ncpt)

GB.1 Foundations

Where foundations are made from reinforced concrete, the reinforcing bars shall where practicable be connected to the tower leg.

6.2.4 GB.1 Dimensioning with regard to human safety

(ncpt)

The method of calculation shall be given in the Project Specification and where required palliative measures shall be defined.

6.4 Earthing measures against lightning effects

(ncpt)

GB.1 Footing resistance

The target footing resistance shall be 10 Ω or less, if a higher value is acceptable this shall be given in the Project Specification. Lower resistance values may be specified where HV and LV earthing systems are bonded together.

Clause National regulation
(type)

7 Supports

7.1 Initial design considerations

GB.1 Design Basis for steelwork

In respect of the Empirical design approach, wood pole steelwork shall comply with the relevant sections of BS 5950 Part 1: 2000 and assumes elastic design. ENV 1993-1-1 shall not be used for steelwork and steel fixing design. Steelwork bolted connections shall be designed to the tensile strength, R_m detailed in ISO 898-1.

7.2 Materials

7.2.6 Timber
(ncpt)

GB.1 ENV 1995-1-1

Timber poles designed to the Empirical approach shall be designed in conformity with the requirements of Sections 4.3 and 7 of this NNA and not to ENV 1995-1-1.

7.3 Lattice steel towers
(ncpt)

GB.1 Design strength

a) Members and connections shall be designed in accordance with ECCS 39, modified as follows:

1) The compressive capacity of members without eccentricity at the end connections, which are supported with asymmetric bracing, shall be calculated assuming:

For Buckling about x-x axis

$$\bar{\Lambda} = 0{,}03 + 1.125\Lambda \qquad \text{if} \quad \Lambda \le \sqrt{2}$$

$$\bar{\Lambda} = 0{,}40 + 0{,}8635\ \Lambda \qquad \text{if} \ \Lambda \ge \sqrt{2}$$

NOTE With the application of the modified value for $\bar{\Lambda}$ given above the 1,2 increase in Λ required in ECCS 39 shall be ignored

2) For members continuous at one end only and connected with a single bolt at the connected and buckling about the v-v axis:

$$\bar{\Lambda} = 0{,}25 + 0{,}8232\Lambda \qquad if\ \Lambda \le \sqrt{2}$$

For buckling about the x-x axis with one bolt in the connected end:

$$\bar{\Lambda} = 0{,}50 + 0{,}6464\Lambda \qquad if\ \Lambda \le \sqrt{2}$$

3) For members discontinuous at both ends and connected with a single bolt at each end Buckling about the x-x or y-y axis:

$$\bar{\Lambda} = 0{,}707 + 0{,}6464\Lambda \qquad if \ \Lambda \le \sqrt{2}$$

$$\bar{\Lambda} = 0{,}40 + 0{,}8635\ \Lambda \qquad if \ \Lambda \ge \sqrt{2}$$

(The symbols are defined in accordance with ECCS 39.)

Clause National regulation
(type)

b) The following slenderness ratios shall not be exceeded:

Legs and crossarm struts	120
Bracings and other members carrying calculated stress other than second order effects	200
Secondary bracings (redundants)	250
Members carrying tension only	350

NOTE Tension-only cross bracing systems should not be adopted on normal self-supporting lattice towers unless allowed by the Project Specification.

c) Secondary bracings (redundants) supporting tower legs shall be designed to resist the hypothetical loads specified in ECCS 39 if the angle between leg and main bracing is equal to or greater than 25 degrees.
If the angle (A) between the bracing and the leg is less than 25 degrees the hypothetical loads from ECCS 39 shall be multiplied by a factor of 0,42/sinA. The minimum allowable angle is 15 degrees. As an alternative to the above procedure, a second order elastic analysis may be performed.

7.4 Steel poles

7.4.5 Ultimate limit states
(ncpt)

GB.1 Design of pole supports

There shall be no limit on deflection unless specified otherwise in the Project Specification, subject to the following conditions:

1. Structures remain fit for their intended purpose in all respects.
2. Minimum electrical clearances are maintained under a 3-year return climatic loading, or a minimum of a 50-year return climatic loadings if an infringement would result in significant risk to human life.
3. Design is based on second order theory, taking account of “p-delta” effects.

Any limit on deflection given in the Project Specification shall apply under 3-year return climatic loadings, unless an infringement would result in significant risk to human life, in which case a minimum of a 50-year return value shall be adopted.

GB.2 Internal forces

Steel poles shall be designed using second order theory, taking account of “p-delta” effects, unless specified otherwise in the Project Specification.

7.5 Timber poles

7.5.1 General
(ncpt)

GB.1 ENV 1995-1-1

The design of timber poles following the Empirical design approach shall consider the requirements of Sections 4.3 and 7 of this NNA. ENV 1995-1-1 shall not apply to the Empirical design approach.

Clause National regulation
(type)

7.5.5 Ultimate limit states
(ncpt)

GB.1 Design of pole supports

If the General approach is adopted, there shall be no limit on deflection unless specified otherwise in the Project Specification, subject to the following conditions:-

1. The structures remain fit for their intended purpose in all respects.
2. Minimum electrical clearances shall be maintained under a 3-year return climatic loadings, or a minimum of a 50-year return climatic loadings if an infringement would result in significant risk to human life.
3. Design is based on second order theory taking account of “p-delta” effects.

Under the General approach, any limit on deflection given in the Project Specification shall apply under a 3-year return climatic loadings, unless an infringement would result in significant risk to human life, in which case a minimum of a 50-year return values shall be adopted.

The total deflection at the pole top under ultimate limit state shall, where required, be specified in the Project Specification in respect of the Empirical design approach.

For an Empirical design approach, the partial factor of safety γ_m to be applied shall be as specified in Table 4.3.11(c)/ GB.1 in this NNA in respect of timber poles.

GB.2 Internal forces

For a General design approach, poles should be designed using second order theory, taking account of “p-delta” effects, unless specified otherwise in the Project Specification.

For an Empirical design approach, the partial safety factor γ_m to be applied for non-guyed timber poles shall be as specified in Table 4.3.11(c)/GB.1 in this NNA. Unless otherwise defined in the Project Specification, non-guyed timber poles shall be designed using first order bending theory only.

GB.3 Pole straightness

The allowable out of straightness of a guyed pole is specified as follows: “a straight line drawn from the centre of the tip to the centre of the pole at a point 1,5 m from the butt shall lie inside the pole”.

GB.4 Resistance of members

Timber poles will normally be fabricated using *Pinus Sylvestris* (Scots Pine) taken from a population whose southern boundary lies at a latitude of 60° North. Poles from this population have the following characteristic values:

Mean ultimate bending strength (Modulus of Rupture)	53,3 N/mm²
Mean ultimate modulus of elasticity	10 054 N/mm²

Where differing species and/ or population is to be employed, this will be detailed in the Project Specification. The Supplier shall submit evidence as to the appropriate mean bending strength and modulus of elasticity for any other species/ population which has been agreed to be employed.

Clause National regulation
(type)

7.7 Guyed structures
(ncpt)

GB.1 Empirical Design of pole supports

For a General design approach, guyed poles shall be designed using second order theory, unless specified otherwise in the Project Specification.

For an Empirical design approach, the partial safety factors γ_m to be applied for guyed supports shall be as specified in Table 4.3.11(c)/ GB.1 in this NNA. Unless otherwise defined in the Project Specification, guyed pole supports shall be designed for buckling only.

8 Foundations

8.4 Loads acting on the foundation
(ncpt)

GB.1Wood pole foundation design

Wood pole intermediate structure foundations employing prescriptive measures will be designed to resist transverse bending loads only, whilst angle/ terminal structure foundations will be designed to resist compressive loads only unless otherwise specified in the Project Specification.

8.5 GB.1 Geotechnical design
(ncpt)

Details of geotechnical design parameters and corresponding partial factors shall be specified in the Project Specification.

8.5.3 GB.1 Geotechnical design by prescriptive measures
(ncpt)

The foundation of self-supporting timber poles shall be as detailed in the Project Specification. Depending on the soil conditions encountered, additional sub-soil blocks may be required to assist in providing stability to the structure.

8.6 GB.1 Loading tests
(ncpt)

Loading tests for pole structures will not generally be required, unless otherwise specified in the Project Specification.

8.7 Structural design
(ncpt)

GB. 1Support/Foundation Interconnection

Where stub angles, which are cast in concrete to form part of the foundation, shall be fitted with angle cleats sufficient to transfer the whole of the uplift load into the concrete. In the case of compression loads, the cleats should be designed to take at least 50% of the loads, with the balance taken in bond between the stub and the concrete. The concrete cover to stubs and cleats shall not be less than 100 mm.

8.8 GB.1 Construction and installation
(ncpt)

Details of design parameters and corresponding partial factors shall be specified in the Project Specification.

Clause National regulation
(type)

9 (ncpt) Conductor and overhead earth wires (ground wires) with or without telecommunications circuits

GB.1 Telecommunication circuits

For details of telecommunications with cables attached to earth wires or for All Dielectric Self Supporting cables (ADSS) see the Project Specification**.**

10 Insulators

10.10 (ncpt**)** Characteristics and dimensions of insulators

GB.1 Inclusion of 28B coupling

The following are required for **safety** reasons.

In addition to the ratings/sizes included in EN 60305 other designs may be used in the GB and these shall be defined in the Project Specification.

Dimensions of 28 mm coupling

The 28 mm coupling is standardised in the GB, designated as 28B, and has a slimmer ball end and reduced socket height compared to the IEC standard coupling. The two ranges are not interchangeable.

In BS 3288 Part 3: 1989 clauses 9 and 10 dimensions of the GB 28B ball and socket are:

Table 10.10/GB – Dimensions of 28B ball and socket

Dimension of pin ball (mm)

d_1	d_2	h_1	r_1	r_2	r_3	r_4
$29^{+0}_{-1,5}$	$50^{+0}_{-1,8}$	$21^{+0}_{-1,7}$	50	100	6,4	$4,5^{+1,5}_{-1,0}$

Dimensions of socket end (mm)

D_1 min	D_2 min	D_3 min	H_1	H_2 min
$31,5^{+2,5}_{0}$	58	58	$23,5^{+2,5}_{0}$	32,5
R_1	**R_3**	**R_4**	**R_5**	**T min**
50	5	5	10	8,7

The corresponding gauge dimensions for both the pin ball and the socket end can be found in BS 3288:Part 3: 1989.

The 28B socket end is only used with the appropriate W-security clip. Referring to clause 16 of BS 3288 Part 3: 1989 the dimensions of the hole, in mm, are:

B_1	B_2 min	H_3	L max
17,5	34,5	$10,5 \pm 0,8$	42

Clause National regulation
(type)

Referring to BS 3288 Part 4: 1989 Clause 7 the dimensions, in mm, of the W-clip for the 28B are:

F_1	F_2	F_3	F_4	F_5	F_6	L_1		
22	30	5	19	25	5^{+1}_{0}	$83 \pm 1{,}5$		
L_2	**L_3**	**L_4**	**L_5**	**R_1**	**R_2**	**R_3 max**	**S**	**T**
15,5	$53 \pm 1{,}5$	10,5	3	2,5	5	2,5	$2^{+0{,}2}_{0}$	$8.7^{+0{,}2}_{0}$

The corresponding gauge dimensions for the W-clip may be found in BS 3288: Part 4:1989.

11 Line equipment – overhead line fittings
(ncpt)

11.9 Characteristics and dimensions of insulator fittings
(ncpt)

GB.1 Inclusion of 28B coupling

(a) Dimensions of 28 mm coupling
As given in Table 10.10/GB

(b) Coupling sizes and mechanical strength

Table 11.9/GB – Standard coupling sizes and failing loads

Standard coupling size mm	Mechanical failing load kN
16	80
20	125
24	190
24	300
28B	400

12 Quality assurance, checks and taking-over

EN 50341-1 applies without change.

Clause National regulation
(type)

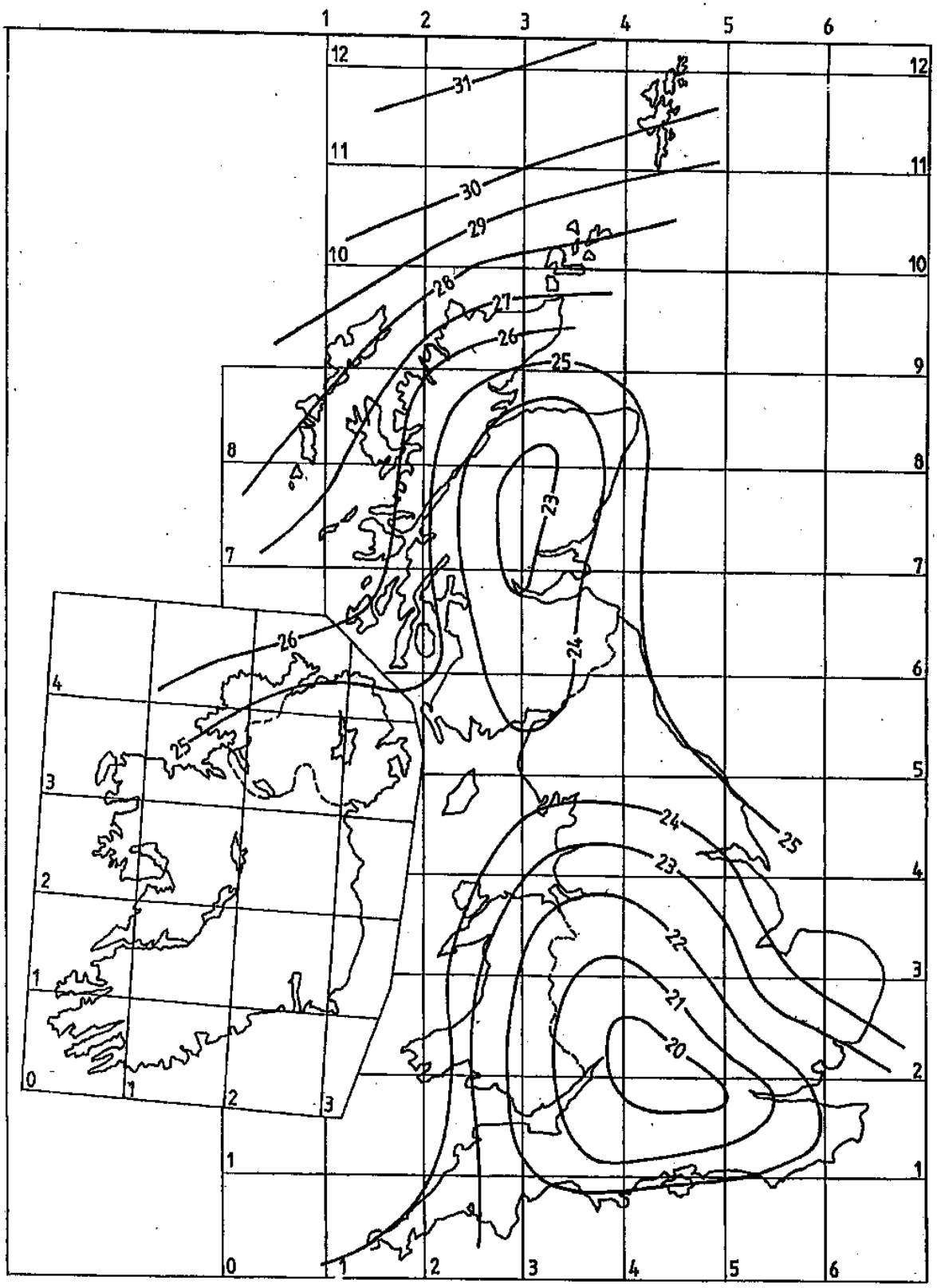

NOTE 1. Values are at sea level in basic open terrain, category III (see table 4.2.2(a)GB)
NOTE 2. Add 10 % per 100 m altitude AMSL to obtain $\bar{V}_B$.
NOTE 3. Values are in metres per second.

Figure 1 Basic mean hourly wind speeds for UK, $\bar{V}_B$ (metres per second)

Clause National regulation
(type)

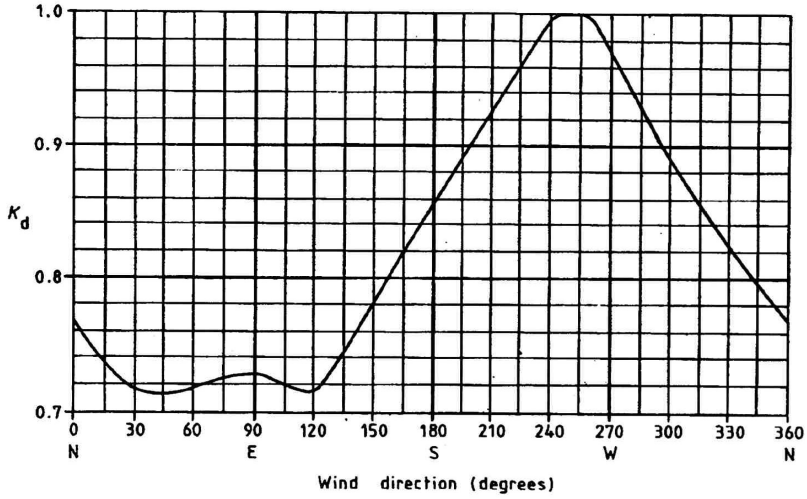

Figure 2 Wind direction factor, K_d

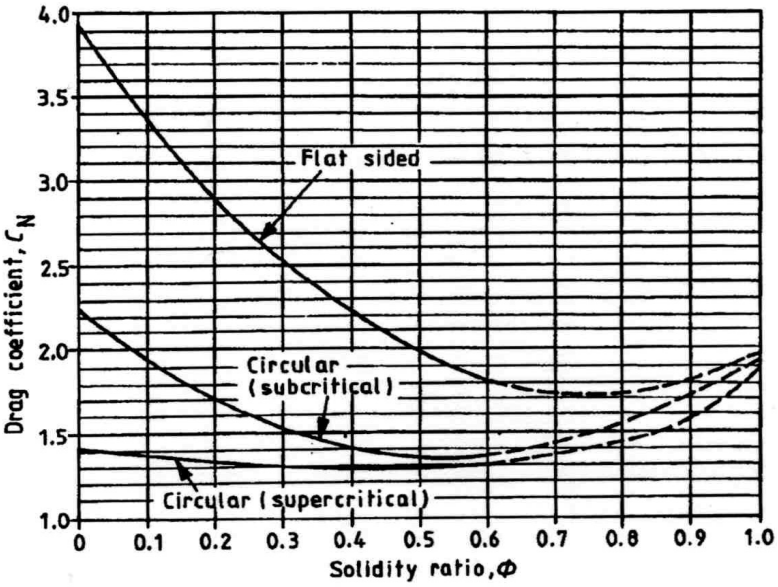

Figure 3 Overall normal drag coefficients, C_N, for towers

The drag coefficient for towers composed of flat-sided members, C_{Nf}, subcritical circular section members, C_{NC}, and supercritical circular-section members, $C_{NC'}$:

$$C_{Nf} = 1{,}76\ C_1\ [\ 1 - C_2\ \phi + \phi^2\ ]$$

$$C_{NC} = C_1\ (1 - C_2\ \phi) + (C_1 + 0{,}875)\ \phi^2$$

$$C_{NC'} = 1{,}9 - \sqrt{\{(1 - \phi)\ (2{,}9 - 1{,}14 C_1 + \phi^2)\}}$$

where: C_1 = 2,25 for square towers
= 1,9 for triangular towers
C_2 = 1,5 for square towers
= 1,4 for triangular towers
ϕ = solidity ratio

Clause National regulation
(type)

Overall drag coefficient $C_N = C_{Nf} A_f / A_F + C_{NC} A_c / A_f + C_{NC'} A_{c'} / A_F$

$A_F = A_f + A_c + A_{c'} = A_S$ when all components are treated as structural members.

Where:

A_F = Total projected area normal to a face.

A_f = total projected area when viewed normal to the face of the flat sided section members in the face.

A_C = projected area when viewed normal to the face of the circular section members in the face in sub-critical regimes.

$A_{C'}$ = total projected area when viewed normal to the face of the circular-section members in the face in supercritical regimes.

Clause National regulation
(type)

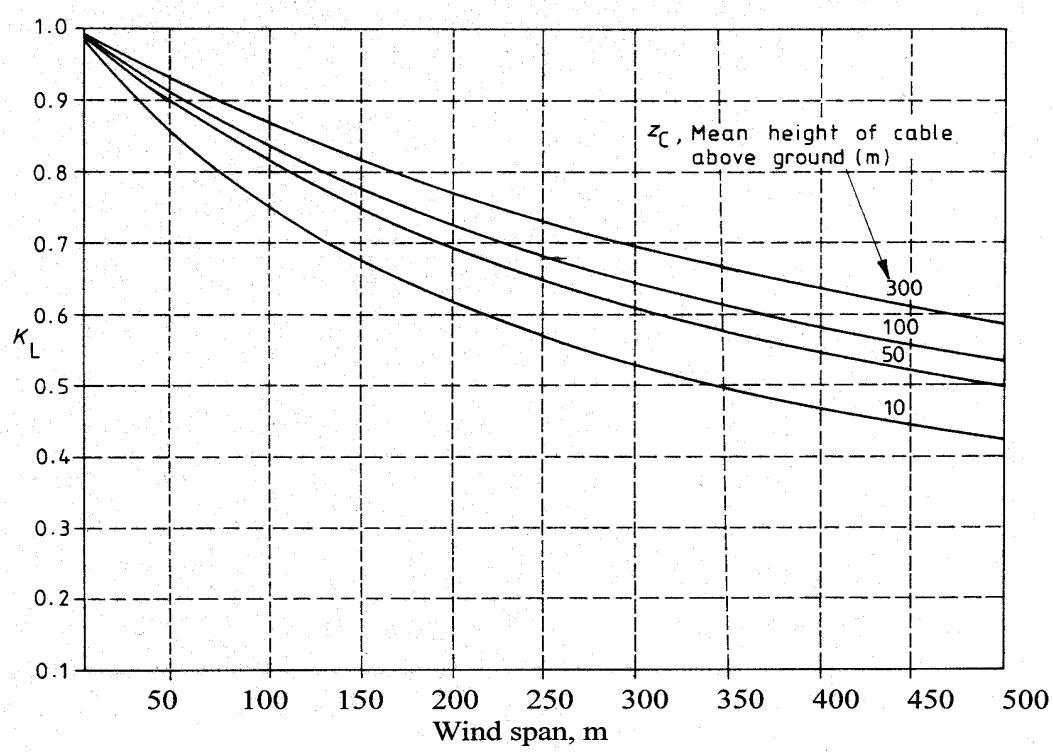

Figure 4 Length factor K_L for conductor wind loads

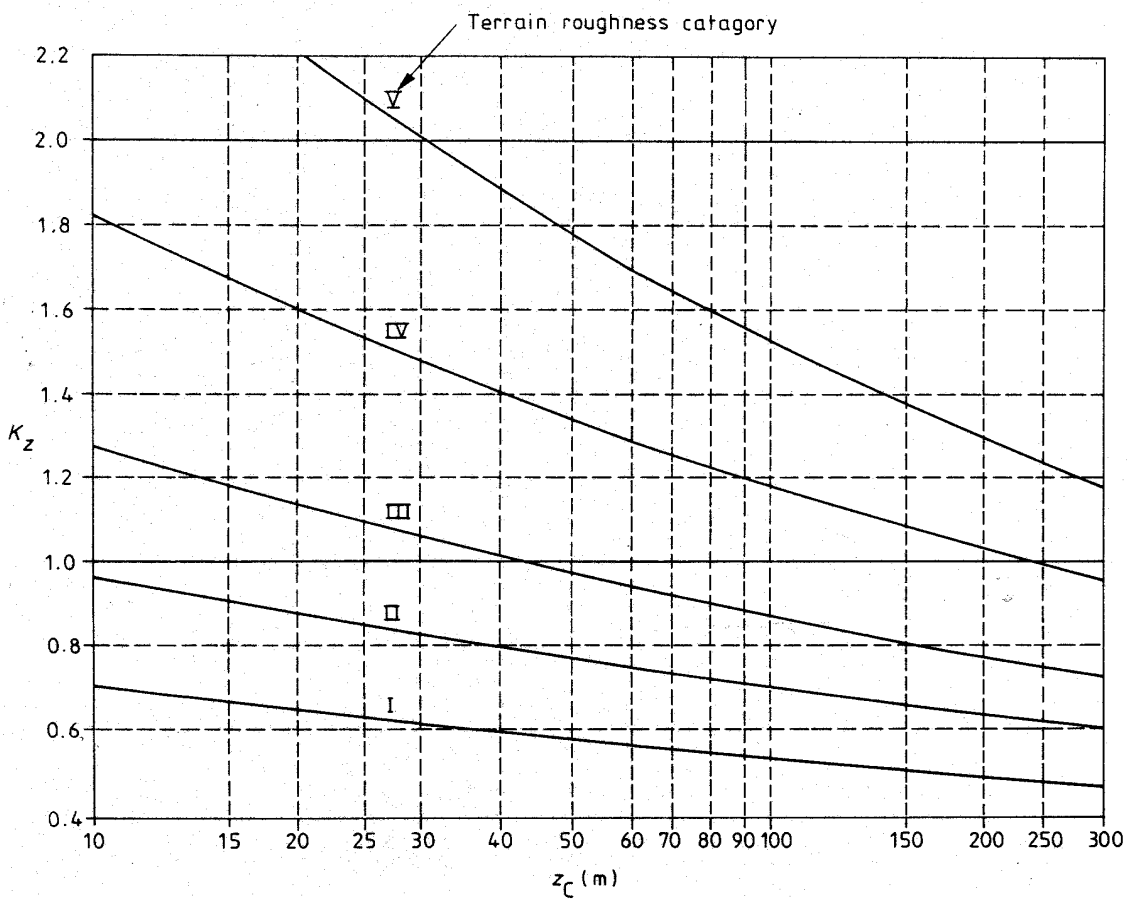

Figure 5 Conductor height factor, K_Z

Clause National regulation
(type)

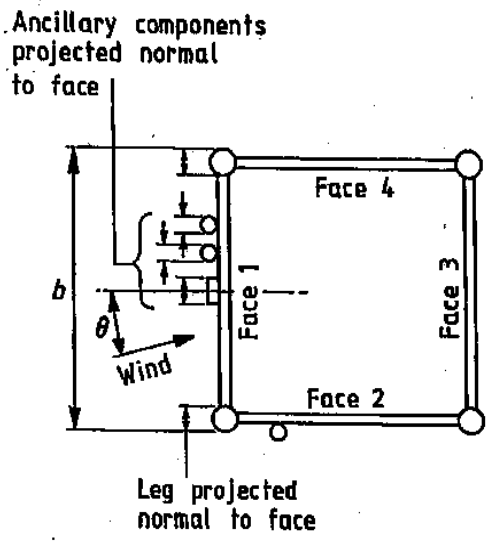

NOTE. Face 1 is to be taken as the windward face such that $-45° \leq \theta \leq 45°$.

(a) Plan on square tower

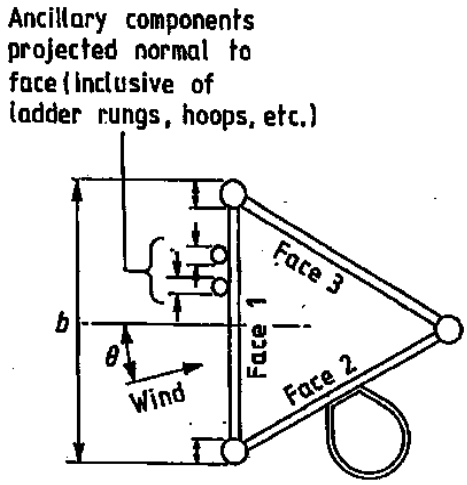

NOTE. Face 1 is to be taken as the windward face such that $-60° < \theta < 60°$.

(b) Plan on triangular tower

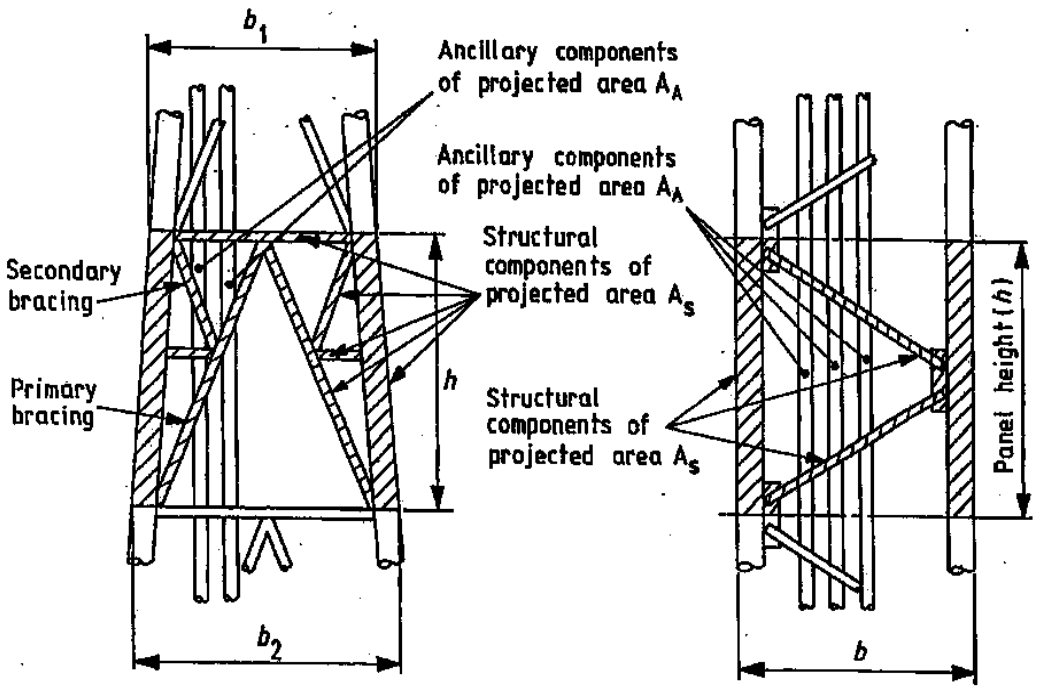

(c) View normal to face (square or triangular tower)

(1) For panel with inclined legs

For (i) and (ii): solidity ratio, $\phi = \dfrac{2A_s}{h(b_1 + b_2)}$

For (iii): solidity ratio, $\phi = \dfrac{2(A_s + A_A)}{h(b_1 + b_2)}$

(2) For panel with parallel legs

For (i) and (ii): solidity ratio, $\phi = \dfrac{A_s}{hb}$

For (iii): solidity ratio, $\phi = \dfrac{A_s + A_A}{hb}$

NOTE. Structural components of front face shown hatched of projected area A_s, which is equal to A_F in (i)

Figure 6 Projected panel area used to calculate solidity ratio, ϕ

Clause National regulation
(type)

Scenarios (i), (ii) and (iii) are defined as follows:

(i) Symmetrical towers without ancillaries
(ii) Symmetrical towers with limited ancillaries
(iii) Towers containing ancillaries or unsymmetrical towers

The wind incidence factor K_θ is given by :

$$K_\theta = 1{,}0 + K_1 K_2 \sin^2 2\theta \text{ for square towers}$$

where:

$$K_1 = \frac{0{,}55 A_f}{A_F} + \frac{0{,}8(Ac + Ac')}{A_F}$$

$K_2 = 0{,}2$ for $0 \le \phi \le 0{,}2$ and $0{,}8 \le \phi \le 1{,}0$

$= \phi$ for $0{,}2 < \phi < 0{,}5$

$= 1 - \phi$ for $0{,}5 < \phi < 0{,}8$

A_f is the total projected area, when viewed normal to the face, of the flat sided members in the face.

A_c is the total projected area when viewed normal to the face of the circular-section members in the face in subcritical regimes

$A_{c'}$ is the total projected area when viewed normal to the face of the circular-section members in the face in supercritical regimes

$$A_F = A_f + A_c + A_{c'}$$

Θ is the angle of incidence of the wind to the normal to the windward face in plan

ϕ is the ratio of the total projected area within a panel height of the structural components in the windward frame.

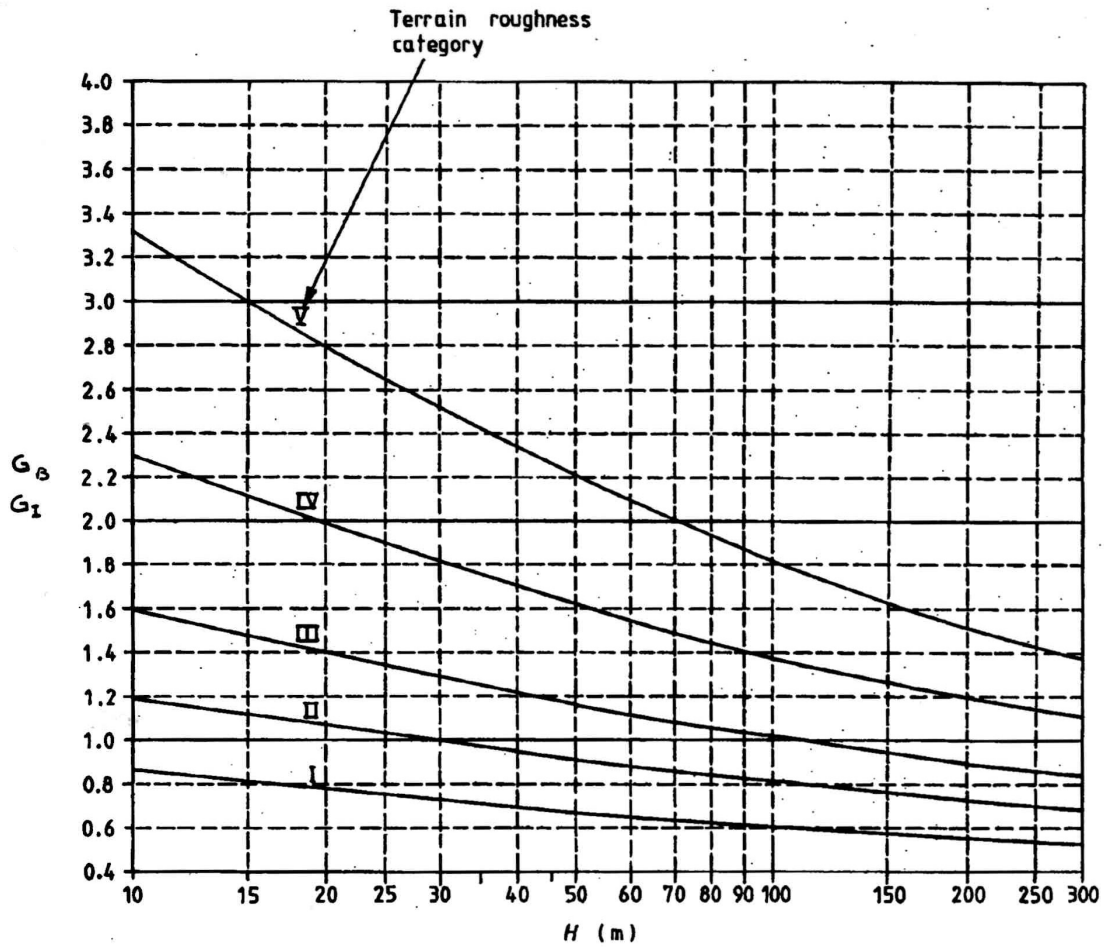

Figure 7 **Basic gust response factor for Towers G_B, Insulators and Fittings G_I**

The basic gust response for towers, G_B, Insulators and Fittings, G_I , is given by the maximum of G_x or G_y where: $G_x = K_1 K_2 (3{,}976/K_R - 2{,}485)$

$$K_1 = (1+\alpha/2)\,(10/H)^{\alpha}$$

$$K_2 = \{2/S_1 + 2/S_1^{\,2}\,(e^{-S1} - 1)\}^{0.5}$$

$$S_1 = (H/100{,}8)\,(10/H)^{\alpha}$$

$$G_y = K_3 K_4 K_5 (3{,}976/K_R - 2{,}485)$$

$$K_3 = (1+\alpha/2)\,(10/K_6)^{\alpha}$$

$$K_4 = \{2/S_2 + 2/S_2^{\,2}\,(e^{-S2} - 1)\}^{0.5}$$

$$K_5 = (K_6/H)^{\alpha}\,\{1-(1-K_6/H)^2\} / \{1-(1-K_6/H)^{\alpha+2}\}$$

$$S_2 = (K_6/100{,}8)\,(10/H)^{\alpha}$$

$$K_6 = H/10 \text{ but not less than } 10 \text{ m}$$

Clause National regulation
(type)

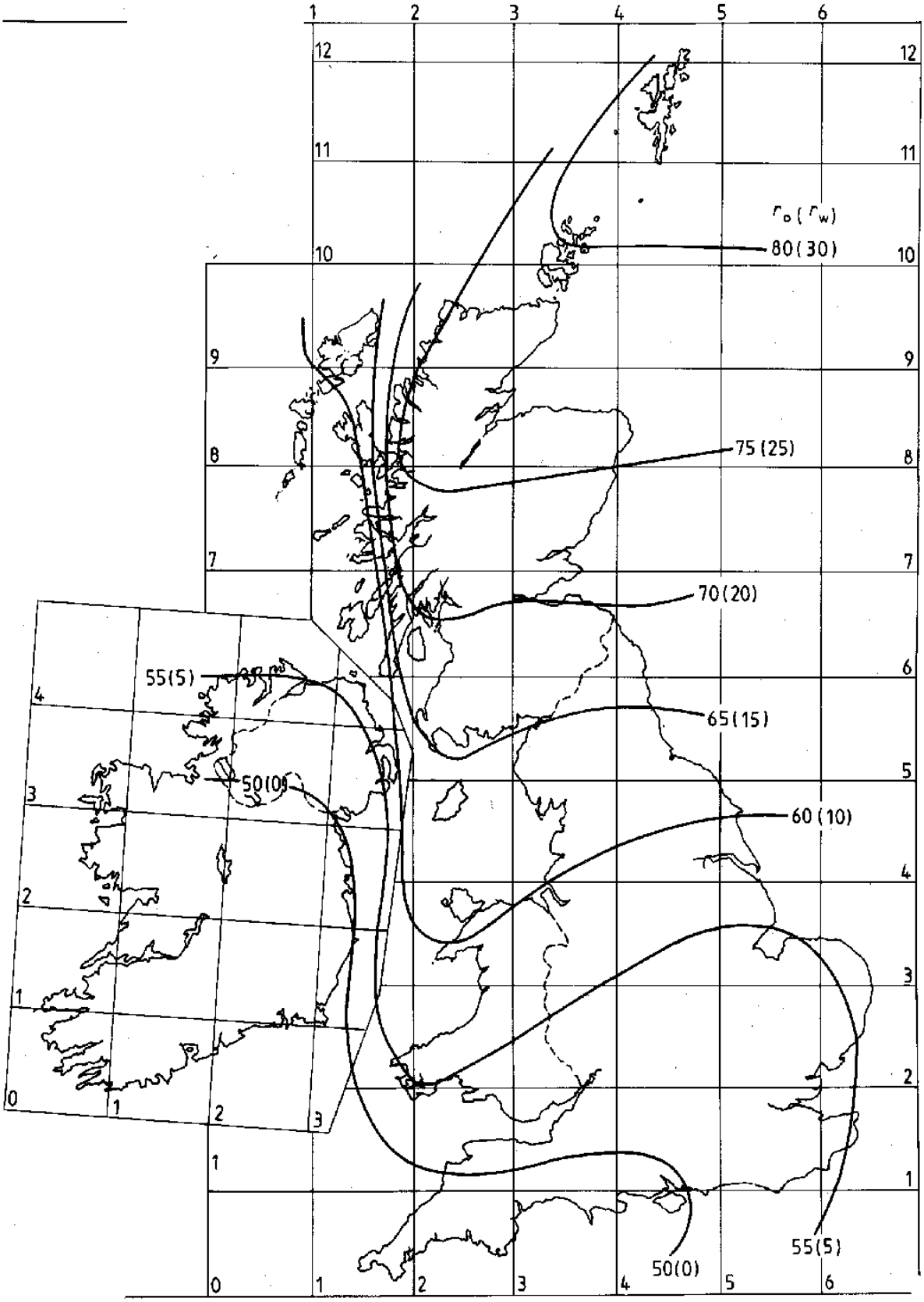

All thicknesses are in millimetres.

Figure 8 Ice thickness for UK, r_o and r_w (in millimetres)

Clause National regulation
(type)

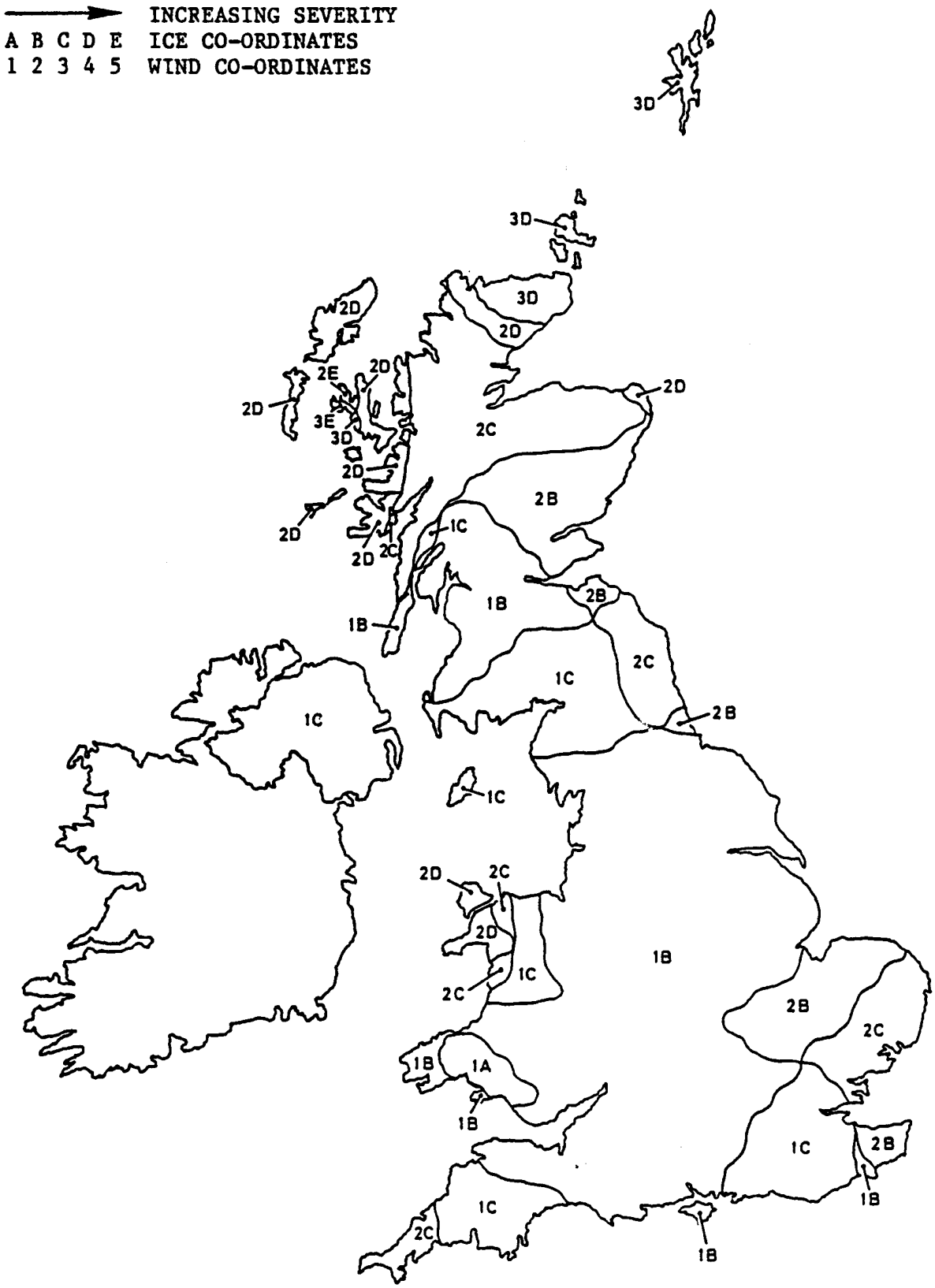

Figure 9 Weather Zones for site heights of 0 to 100 m

Clause National regulation
(type)

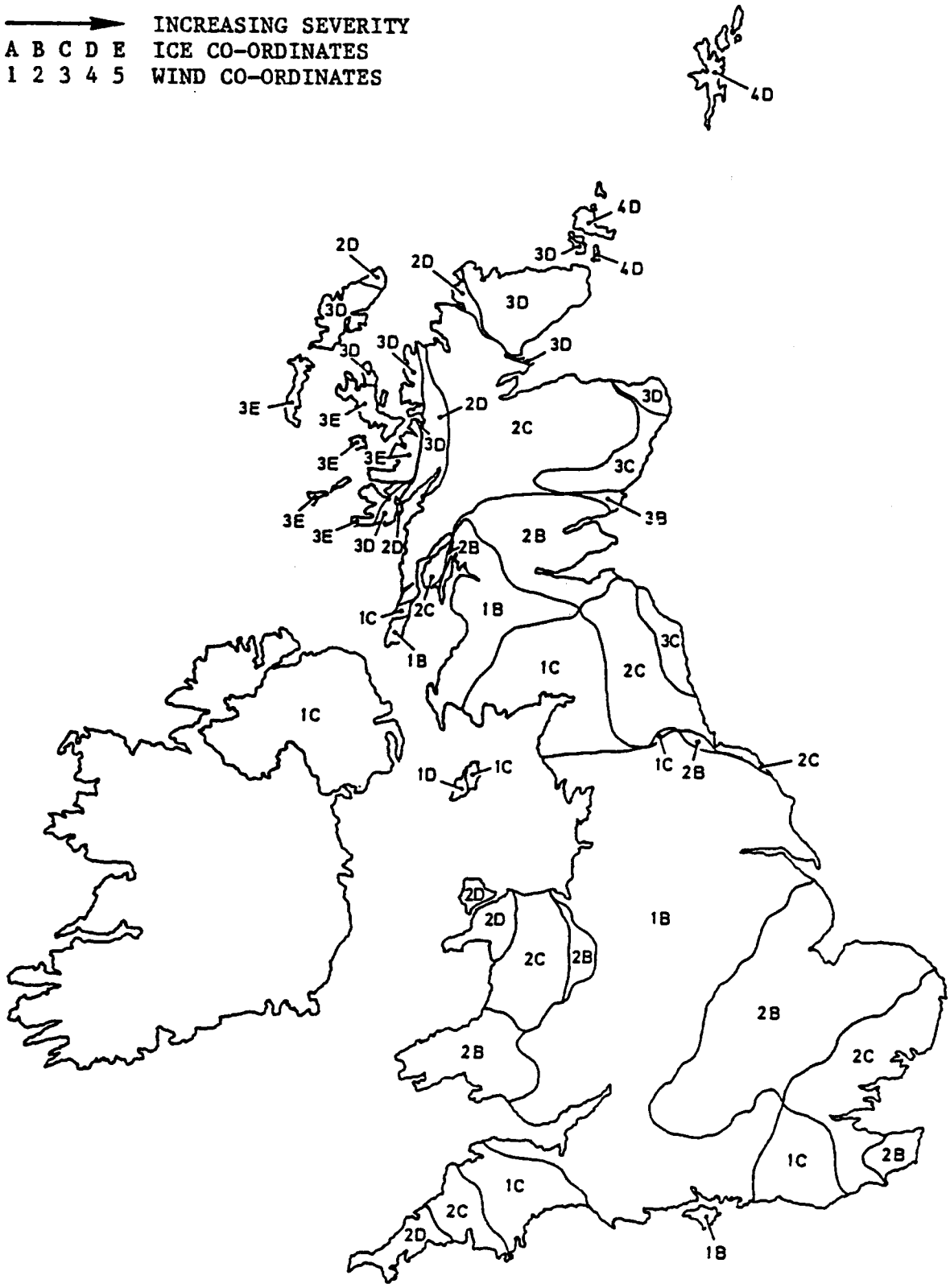

Figure 10 Weather Zones for site heights of 100 m to 200 m

Clause National regulation
(type)

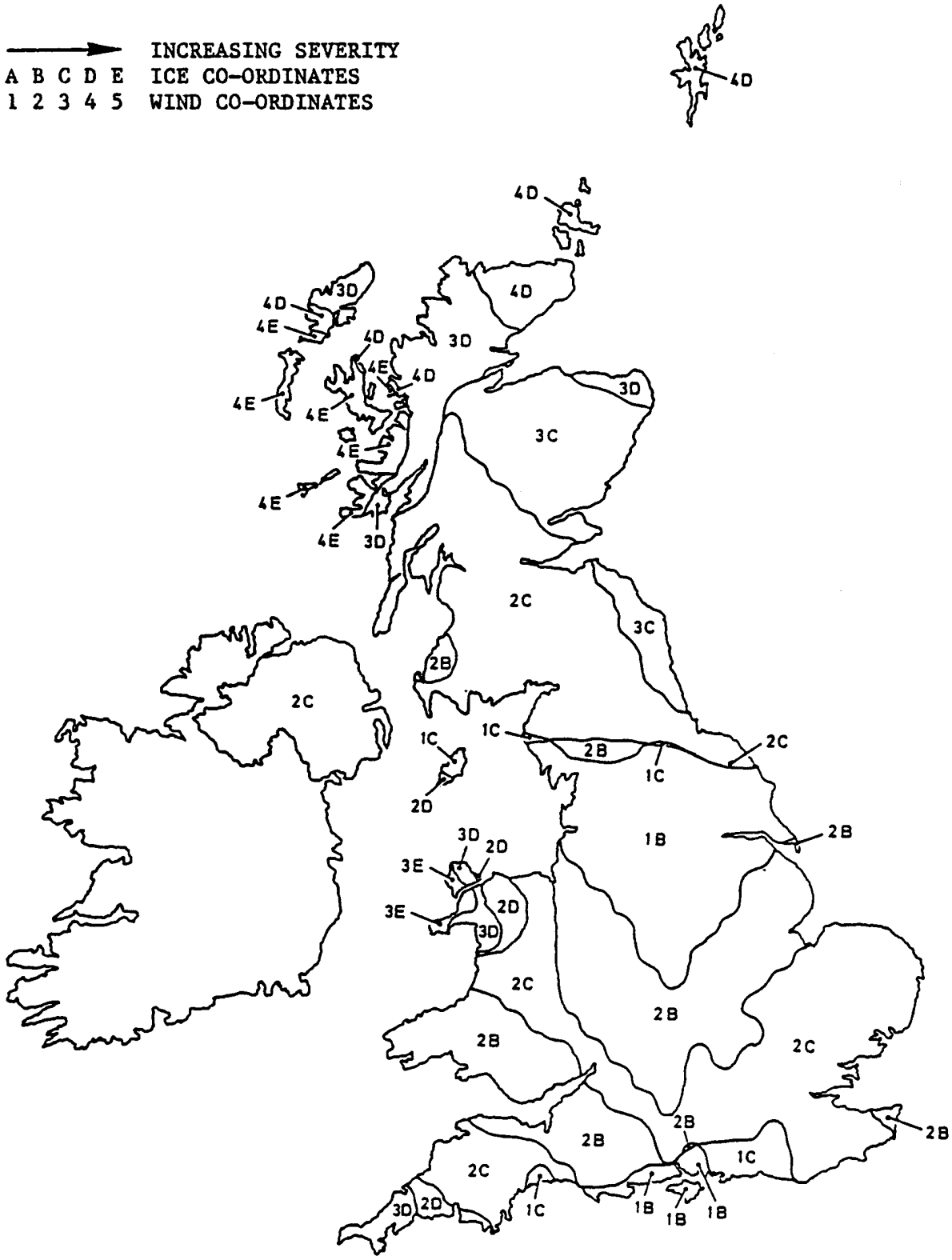

Figure 11 Weather Zones for site heights of 200 m to 300 m

Clause National regulation
(type)

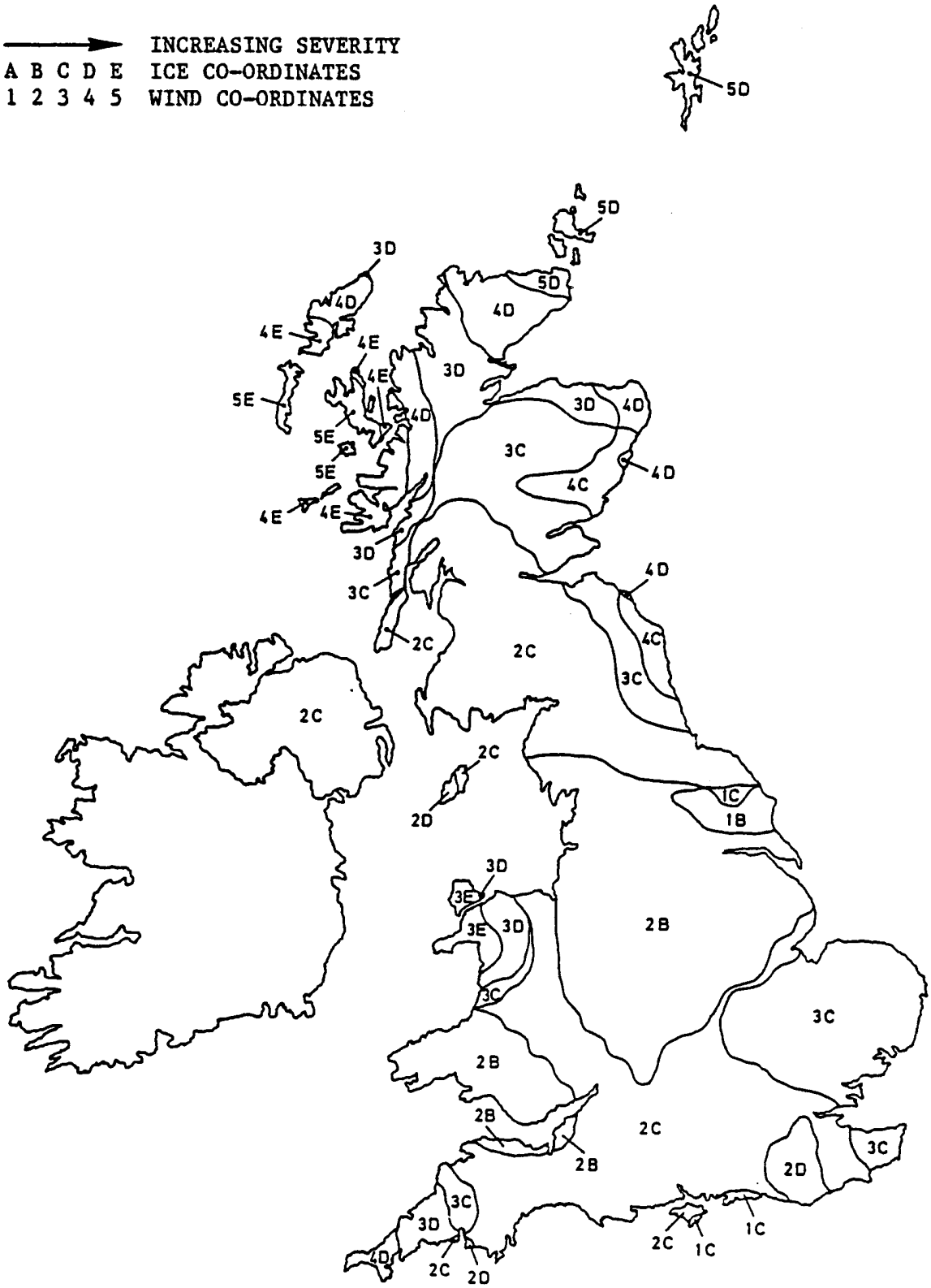

Figure 12 Weather Zones for site heights of 300 m to 400 m

Clause National regulation
(type)

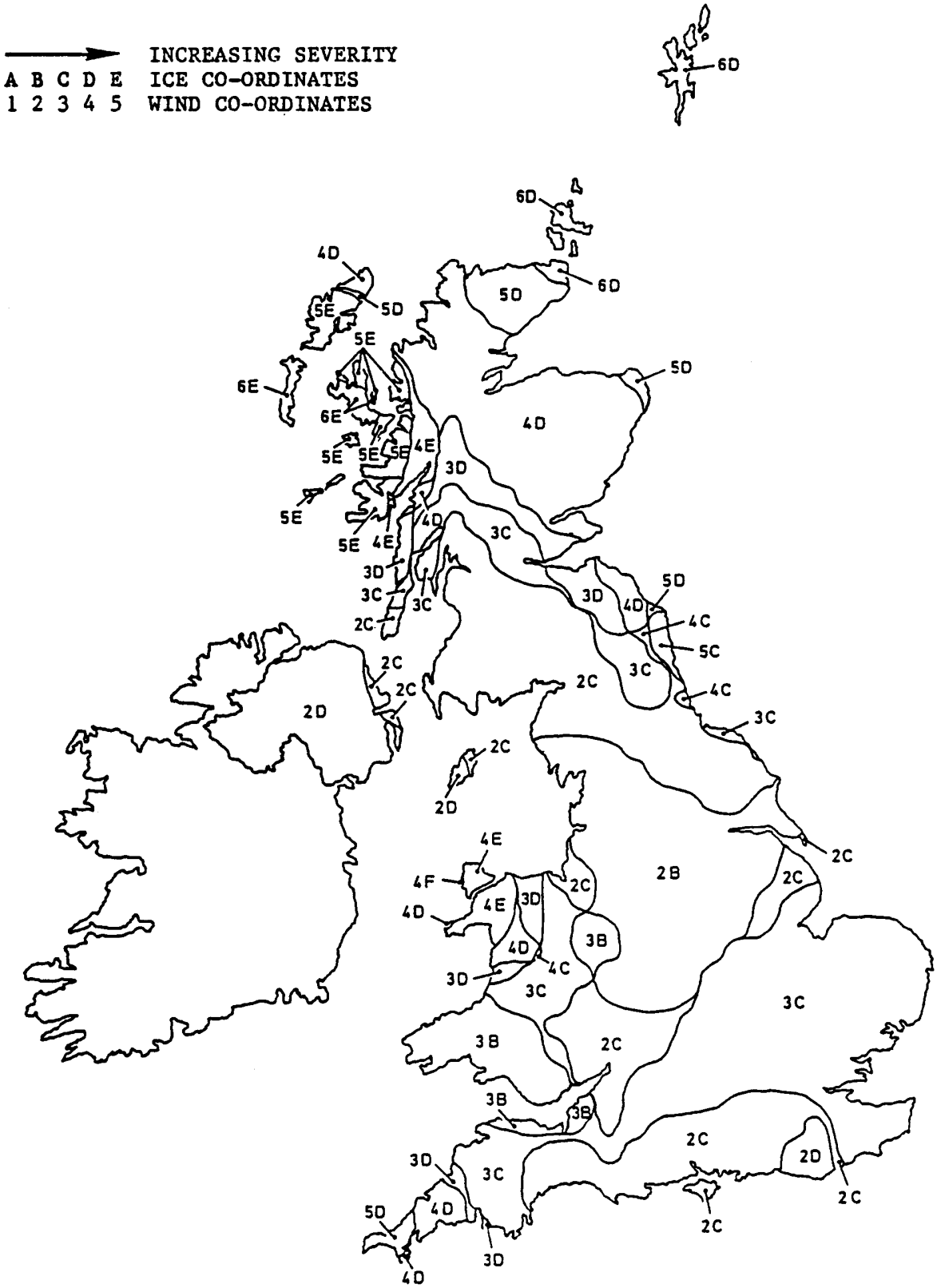

Figure 13 Weather Zones for site heights of 400 m to 500 m

EN 50341-3-15:2001/corrigendum April 2006

National Normative Aspects for The Netherlands

Replace pages 27, 28 and 33 by the following:

Clause National regulation

The remaining 10 % of the towers may have a resistance that is up to twice this value. Towers within a distance of 1 km from a substation or within 30 m from a residence shall not exceed the values given in the table.

NOTE 90% R_m: the upper limit of the resistance in ohm, below which 90% of the tower resistances of a line shall be.

(ncpt) **NL.2** The length of an individual earthing electrode shall be less than $1.5\sqrt{\rho_E}$ [m]

7 Supports

7.2.3 Requirements for steel grades subject to galvanising

(ncpt) **NL.1**

a) Si - contents ≤ 0,04%

b) Si - contents ≥ 0,12% and ≤ 0,30%

7.2.4 Holding-down bolts

(ncpt) **NL.1** The band anchorage of holding-down bolts shall be in accordance with 7.3.6.4.

7.2.8 NL.1 Other materials

(ncpt) For attachment points of insulators at the towers see also 11.8/NL.1

7.3.5.1.1 Latticed steel towers; General

(ncpt) **NL.1** The partial safety factor g_M shall be taken as follow:

resistance of cross sections of members: g_{M1} = 1,0

resistance of members of buckling: g_{M1} = 1,0

resistance of net section of members at bolt holes: g_{M2} = 1,25.

7.3.5.3 Classification of cross sections

(ncpt) **NL.1** Sections of lattice towers shall be considered to be class 1, 2, 3 or 4, in accordance with the requirements of ENV 1993-1-1, 5.3. Cross sectional behaviour of section of classes 1 and 2 shall be limited to elastic behaviour.

7.3.5.4 Resistance of lattice members

(ncpt) **NL.1 Section properties**

Reference is made to 5.4.2 of ENV 1993-1-1 (replacing annex J, clause J.3).

(ncpt) **NL.2 Check of cross section resistance**

The resistance of cross sections of members shall be determined in accordance with the requirements of ENV 1993-1-1:

- 5.4.3, axial tension;
- 5.4.4, axial compression;
- 5.4.5, bending moment;
- 5.4.8, bending and axial force;
- For cross section resistance in case of one leg connected (tension), reference is made to 6.5.2.3 of ENV 1993-1-1.

(ncpt) **NL.3 Buckling length of members**

- For leg members and chords reference is made to annex J, J.6.2
- For compression members reference is made to annex J, J.5.1.

Clause National regulation

– For members of cross bracing's (see Figure J.4.c of annex J) the buckling length should be taken as indicated in this clause, provided that:
  - the length of the supporting member (l_{sup}) should be less then 1,2 times the length of the supported member in compression (l_{com});
  - equal cross-sections of members;
  - both members should be fixed together and has to restrain 20 % of the compression load in the member transverse to the plane of the bracing.

The slenderness should be taken as:
$\lambda_1 = L_1 / r_{vv}$ for angles;
$\lambda_2 = L_2 / r_{yy}$ for angles or L_2 / r_{zz} for angles,
where: $L_2 = K_b \,.\, L_{com}$
K_b = effective length factor for cross bracing
L_{com} = the system length of the member in compression
$K_b = \{0{,}75-0{,}38\ \alpha_1(1+1/K)\}F_{sup}/F_{com}+0{,}25\ \alpha_1(1+1/K)+1/2$
$K_b \leq 1{,}0$
$K_b \geq 0{,}25\alpha_1(1+1/K)$
$\alpha_1 = L_1 / L_{com}$
$K = 0{,}7 + 0{,}58\ \lambda_{com}$
$\lambda_{com} = L_{com} / r_{yy}$

(ncpt) **NL.4** Where redundant members are inserted to stabilise the legs (see Figure J.4.d of annex J) they also reduce the buckling length on the minimum axis of L_1. The slenderness ratio shall be taken as:
$\lambda_1 = L_1 / r_{vv}$ for angles;
$\lambda_3 = L_3 / r_{yy}$ of L_3 / r_{zz} for angles,
where: $L_3 = K_b L_{com}$

NOTE For K_b and L_{com} see 7.3.5.4 NL.3.

(ncpt) **NL.5** For horizontal members which should provide restraints for the bracing members informative criteria are given in annex J, J.6.3.5.
Otherwise the horizontal member should be regarded only as redundant.

(ncpt) **NL.6** For multiple lattice bracing, see annex J, J.6.3.6, which have to be regarded as informative requirements.

(ncpt) **NL.7** For cross bracing with diagonal corner stays the slenderness ratio shall be taken as follows (see also Figure J.5.f of annex J):
$\lambda_1 = L_1 / r_{vv}$ for angles
$\lambda_5 = K_b\ L_5 / r_{yy}$ or $K_b\ L_5 / r_{zz}$ for angles

NOTE for K_b see 7.3.5.4 NL.3.

Stability checks shall be carried out according to J.6.3.6 (2) of normative annex J, which have to be regarded as informative.

(ncpt) **NL.8** Secondary members (redundants)
Replacing clause J.10 of normative annex J.
Secondary members may be taken as supports, if the angle between the secondary members and compressed leg member or bracing member is more than 25° measured in the plane of the bracing. If this condition is not satisfied the redundants should be incorporated in the calculation model.

Clause National regulation

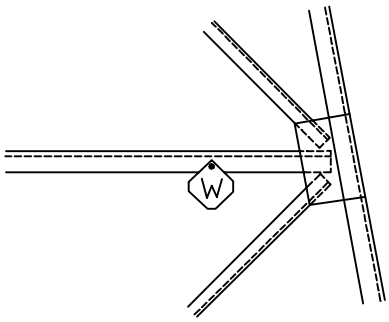

Figure 1 - Circuit indication

1.4 Flagstaff holders

For every circuit at the lower side of each climbing feature a flagstaff holder must be present for each circuit indication. The design of the flagstaff holders must be such that it is unique per circuit.

2 Climbing facilities

2.1 General

Every tower must be provided with a climbing facility.
At the lower side of towers the climbing facility must be missing for an unbroken distance of 2,5 m.
Climbing facilities must consist of step bolts, step clips and/or ladder constructions.
Climbing facilities must continue until the top of the tower or until 1,1 m above the rest platform or step-up platform to the crossarms and must offer a good stepover to the crossarms.
In lattice towers step bolts must be positioned in such a way that, after switching off one or more circuits, it will be possible to climb at the side of the tower where the circuit is out of service (see Figure 1A).

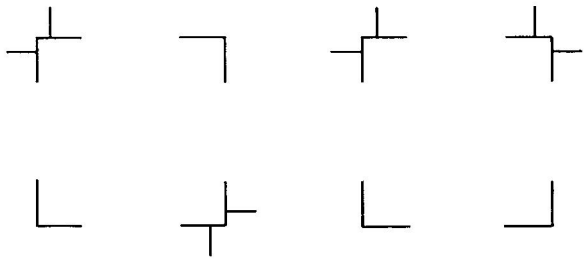

diametral front or rear side

Figure 1A – Top view step bolts

Step bolts, step clips or rungs of ladders must have a distance in between of at least 250 mm and 300 mm at the most (see Figure 2). For each climbing facility the successive distances in between may not differ more than 15 mm.

REMARK: At pronounced places, for instance at a crossarm, it may be necessary to switch to another distance in between step bolts, step clips or rungs of ladders. Changing of once chosen measures must be avoided.

At tubular poles two climbing facilities must be present, positioned opposite to each other.

REMARK: Attention must be paid to prevention of damage to knees and ankles, for instance by beveling the steel sections.

National Normative Aspects (NNA)

for

NORWAY

based on EN 50341-1:2001

Version circulated with corrigendum April 2006.

Contents

Foreword....5
1 Scope....6
2 References, terms and definitions....6
2.3 NO.1 References....6
3 Basis of design....6
3.1 NO.1 General....6
4 Actions on lines....6
4.2.2.1 NO.1 Wind speeds....6
4.2.2.1.5 NO.1 Reference wind speed V_R....6
4.2.2.1.6 NO.1 Wind speed V_h at arbitrary height above ground....7
4.2.2.2 NO.1 Dynamic wind pressure....7
4.2.2.4.1 NO.1 Wind forces on conductors....7
4.2.3.2 NO.1 Characteristic ice load....8
4.2.4 NO.1 Combined wind and ice loads....8
4.2.4.2 NO.1 Drag factors and ice densities....8
4.2.5 NO.1 Temperature effects....9
4.2.6 NO 1.1 Construction and maintenance loads....10
4.2.6.1 NO 1.1 General....10
4.2.7 NO.1 Security Loads....11
4.2.8 NO.1 Short circuit loads....11
4.2.9.1 NO.1 Avalanches, creeping snow....11
4.2.9.2 NO.1 Earth quakes....11
4.2.10 NO.1 Load cases....12
4.2.11 NO.1 Partial factors for actions....13
5 Electrical requirements....17
5.1 NO.1 Voltage classification....17
5.2 NO.1 Currents....17
5.2.1 NO.1 Normal current....17
5.3 NO.1 Insulation co-ordination....17
5.3.5.2 NO.1 Result of calculation using method in annex E....17
5.4 NO.1 Internal and external clearances....17
5.4.2.2.1 NO 1.1 Maximum conductor temperature....17
5.4.2.2.1.1 NO.1.2 Maximum earth wire temperature....17
5.4.2.2.2 NO.1.2 Ice load for determination of electrical clearances....17

5.4.2.2.3 NO.1.3.1 Wind load for determination of electrical clearances 17
5.4.2.2.3 NO.1.3.2 Wind load for determination of electrical clearances 17
5.4.2.2.3 NO 1.3.3 Wind load for determination of electrical clearances 17
5.4.2.2.3 NO.1.3.4 Wind load for determination of external electrical clearance 18
5.4.3 NO.1 Clearances within the span and at the tower 18
5.4.3.1 NO.1 Clearances within the span 18
5.4.5 NO.1 Clearances to buildings, traffic routes, other lines and recreational areas 21
5.4.5.1 NO.1 General 21
5.4.5.1 NO.2 General 21
5.5 NO.1 Corona effect 27
5.6 NO.1 Electric and magnetic fields 27
5.6.3 NO.1 Interference with telecommunication circuits 27
6 Earthing systems 27
6.1 NO.1 Purpose 27
6.2 NO.1 Dimensioning of earthing systems at power frequency 27
6.2.2.2 NO.1 Earthing and bonding conductors 27
6.2.4.1 NO.1 Permissible values 27
6.2.4.4 NO 1 Measures in systems with isolated neutral or resonant earthing 27
6.3 NO.1 Construction of earthing systems 27
6.3.2 NO.1 Transferred potentials 27
6.4 NO.1 Earthing measures against lighting effects 27
6.5 NO.1 Measurements for and on earthing systems 28
6.6 NO.1 Site inspection and documentation of earthing systems 28
7 Supports 28
7.2 NO.1 Materials 28
7.3.5 NO.1 Ultimate limit states 28
7.3.5.1 NO.1 Basis 28
7.3.5.1.1 NO.1 General 28
7.3.5.4 NO.1 Resistance of lattice members 28
7.3.6 NO.1 Connections 29
7.3.6.1 NO.1 Basis 29
7.3.6.1.1 NO.1 General 29
7.5 NO.1 Timber poles 29
7.5.1 NO.1 General 29
7.5.5.1 NO.1 Basis 29

7.5.6 NO.1 Resistance of connections 29
7.7 NO.1 Guyed structures 29
7.7.5.1 NO.1 Basis 29
7.9 NO.1 Corrosion protection and finishes 29
7.9.2 NO.1 Galvanising 29
7.9.7 NO.1 Protection of timber poles 29
7.10 NO.1 Maintenance facilities 30
7.10.2 NO.1 Maintainability 30
8 Foundations 30
8.5 NO.1 Geotechnical design 30
8.5.2 NO.1 Geotechnical design by calculation 30
9 Conductors, earthwires and telecommunication cables 32
10 Insulators 32
11 Live equipments – Overhead line fittings 32

Foreword

1 The Norwegian National Committee (NC) is identified by the following address:

Norsk Elektroteknisk Komité
PO Box 280, 1326 Lysaker, Norway
Visiting address Strandveien 18, Lysaker
Phone no. +47 67 83 31 00
Fax no. +47 67 83 31 01
E-mail: Nek@nek.no

2 The Norwegian NC has prepared this Part 3-16 of EN 50341, listing the Norwegian national normative aspects, under its sole responsibility, and duly passed it through the CENELEC and CLC/TC 11 procedures.

NOTE The Norwegian NC also takes sole responsibility for the technically correct coordination of this EN 50341-3-16 with EN 50341-1. It has performed the necessary checks in the frame of quality assurance/control. It is noted however that this quality assurance/control has been made in the framework of the general responsibility of a standards committee under the national laws/regulations.

3 This EN 50341-3-16 is normative in Norway and informative for other countries.

4 This EN 50341-3-16 has to be read in conjunction with EN 50341-1, hereinafter referred to as Part 1. All clause numbers used in this Part 3-16 correspond to those of Part 1. Specific subclauses, which are prefixed “NO”, are to be read as amendments to the relevant text in Part 1. Any necessary clarification regarding the application of Part 3-16 in conjunction with Part 1 shall be referred to the Norwegian NC who will, in cooperation with CLC/TC 11 clarify the requirements.

When no reference is made in Part 3-16 to a specific subclause, then Part 1 applies.

5 In the case of “boxed values” defined in Part 1, amended values (if any) which are defined in Part 3-16 shall be taken into account in Norway.

However any boxed values, whether in Part 1 or Part 3-16, shall not be amended in the direction of greater risk in a Project Specification.

The Norwegian NC declares in accordance with subclause 3.1 of Part 1 that this Part 3-16 follows the “General approach” (4.1), and that consequently subclause 4.2 “Empirical Approach” is not applicable for Norway.

6 The national Norwegian standards/regulations related to overhead electrical lines exceeding 45 kV (AC) are identified in 2.3/NO1.

NOTE All national standards referred to in this Part 3-16 will be replaced by the relevant European Standards as soon as they become available and are declared by the Norwegian NC to be applicable and thus reported to the secretary of CLC/TC 11.

Clause National regulation

1 Scope

(ncpt) **NO.1** Note 1, Note 2, Note 3

All 3 notes of clause 1 of Part 1 are normative in Norway.
This Part 3-16 is applicable for new overhead lines only and not for existing lines in Norway. If some planning/design or execution work on existing lines in Norway has to be performed, the degree of application of this Standard shall be agreed upon by the parties concerned and the authorities.

2 References, terms and definitions

2.3 NO.1 References

NS 3491-4 Prosjektering av konstruksjoner – dimensjonerende laster - vindlaster (regarding reference wind speeds)

Act No. 4 of 24 May 1929 of Supervision of Electrical Installations and Electrical Equipment Regulations for Electrical Installations – system for generating, transmission and distribution.

3 Basis of design

3.1 NO.1 General
(ncpt)

The design philosophy of the Norwegian overhead lines shall be based on the General Approach.

4 Actions on lines

4.2.2.1 NO.1 Wind speeds
(ncpt)

The gust wind speed option is used.

4.2.2.1.5 NO.1 Reference wind speed V_R
(snc)

The wind speed shall be chosen according to Norwegian Wind Standard NS 3491-4 where the socalled local wind speed V_S is listed for each municipality in the country.

The reference wind speed is

$$V_R = 0{,}9 \cdot k_g \cdot (V_T/V_{50}) \cdot V_S$$

where k_g is as given in 4.2.2.1.4 of Part 1. V_T/V_{50} is found in Table 4.2.2.1.5 (NO). V_T is the extreme wind speed with the relevant return period. V_{50} is the extreme wind speed with a return period of 50 years.

Clause National regulation

Table 4.2.2.1.5/NO.1

Return period T	Conversion factor V_T/V_{50}	Conversion factor $(V_T/V_{50})^2 = \gamma_L$
3	0,763	0,58
50	1,000	1,00
150	1,087	1,18
500	1,182	1,40

In fjords or valleys the given wind speed values apply for a line direction parallel to the main direction of the fjord or valley. If the line direction is perpendicular to the fjord/valley direction, or if the line along a fjord/valley passes the mouth of a branch fjord/valley, the given wind speed should be multiplied by 1,2.
For regions not listed in the table, meteorologist should be consulted.

4.2.2.1.6 *NO.1 Wind speed V_h at arbitrary height above ground*
(snc)

The reference wind speed V_R is referred to 10 m above ground, but allowed to be used up to 20 m above ground.

Table 4.2.2. is not used.

4.2.2.2 *NO.1 Dynamic wind pressure*
(ncpt)

Air density is given as ρ = 1,292 kg/m^3 at 0 ^{o}C and atmospheric air pressure at 1013 hPa. Use of other values for other air temperatures and other atmospheric pressures is optional.

4.2.2.4.1 *NO.1 Wind forces on conductors*
(ncpt)

Wind pressure on conductors gives forces transversal to the direction of the line as well as higher tension in the conductors. From each of the two neighbouring spans the load on the tower is

$$F_c = q_h \cdot C_{xc} \cdot G_L \cdot d \cdot \frac{L}{2}$$

where

q_h = dynamic wind pressure as defined in 4.2.2.2 but including the Norwegian NNA above, based on the highest perpendicular component of the wind speed on the conductor.

C_{xc} = drag coefficient for the conductor. For ordinary stranded conductors and regular wind speeds, C_{xc} = 1,0. For smooth conductors C_{xc} = 1,1.

G_L = span factor (see below).

d = diameter of conductor.

L = length of span

The total wind pressure on bundled conductors is set equal to the sum of that on the individual conductor without taking into accout possible sheltering effects on leeward conductors.

Clause National regulation

The span factor can be calculated as follows:

$G_L = 1$	for span lengths up to 100 m
$G_L = 1 - (L - 100)/1\,000$	for span lengths between 100 and 450 m
$G_L = 0{,}65$	for span lengths exceeding 450 m

Other span factors can be used after consulting a meteorologist, or as documented otherwise.

The direct forces on an angle tower due to wind pressure shall be calculated as for ordinary tangent towers. The transvers component of the conductor tension, calculated with respect to the design wind load shall be added to the direct wind force as stated above.

4.2.3.2 *NO.1 Characteristic ice load*
(snc)

Table 4.2.3.2/NO.1 gives general 50 year values for the different regions in Norway, and is meant to be the basis for design where no other information is available. The given values will be currently adjusted as new information is available. The given values may be deviated from if separate evaluations are made by meteorologist.

For regions not covered in the table, meteorlogist should be consulted.

To arrive at the actual design values according to the reliability class, the values of Table 4.2.3.2 (NO.1) has to be multiplied by the conversion factor given in Table 4.2.3.2 (NO.2).

Table 4.2.3.2/NO.2

Return period T	Conversion factor g_T/g_{50}
3	0,35
50	1,00
150	1,25
500	1,50

4.2.4 *NO.1 Combined wind and ice loads*
(snc)

This load case may be omitted where adviced by meteorologist.

4.2.4.2 *NO.1 Drag factors and ice densities*
(snc)

These are given only for wet snow and hard rime ice since these are the two ice types considered for design purposes in Norway.

Table 4.2.6/NO – Drag factors C_{cl} and density ρ_l (kg/m^3) for various types of ice

Ice type	Wet snow	Hard rime ice
C_{cl}	1,0	1,1
ρ_l	600	700

Clause National regulation

Table 4.2.3.2/NO.1 - Design ice loads

No	Region	Height above sea level (m)	Design ice load (N/m) 50 year return period
1	Main areas of the South East region*)	0 - 200	30
2	Main areas of the South East region*)	200 - 400	40
3	Main areas of the South East region	400 - 600	50
4	Østfold and Vestfold	0 - 200	20
5	Telemark and Agder	0 - 200	35
6	Telemark and Agder	200 - 400	50
7	The coast Rogaland - Stad	0 - 200	35
8	Fjordane Rogaland - Stad	0 - 400	40
9	The coast Stad - Namdalen	0 - 200	40
10	The fjords Stad - Namdalen	0 - 400	40
11	The coast Namdalen - Lofoten	0 - 200	40
12	The inland of Nordland	0 - 200	30
13	The coast Vesterålen - Nordkapp	0 - 100	35
14	The inland Troms - Vest-Finnmark	0 - 200	30
15	The coast of Aust-Finnmark	0 - 100	30
16	The inland of Aust-Finnmark	0 - 200	20
*)Except areas mentioned especially.			

4.2.5 *NO.1 Temperature effects*
(snc)

(1) The minimum temperature to be considered with no other climatic action is the yearly minimum temperature with a return period of 50 years, but not higher than - 20 °C.

(2) For the extreme wind speed condition, the temperature is set equal to 0 °C.

(3) Wind acting during minimum temperature condition is not to be considered.

(4) As in Part 1.

(5) For the combination of wind and ice, the temperature is set equal to 0 °C.

Clause National regulation

4.2.6 NO 1.1 Construction and maintenance loads

4.2.6.1 NO 1.1 General
(ncpt)

Additional national requirements:

NO 1.1 Tower erection
Tower erection gives often dynamic and unbalanced loads. The strength of actual lifting points and other stressed members should therefore be designed to withstand the double of the load the construction method implies. A Factor of 1,45 can be used if the workmanship is carefully controlled. Possible wind loads during construction should be considered.

NO 1.2 Stringing and sagging of conductors
NO 1.2.1 Conductor tension. Effect on structures
The structure should withstand the double of the sagging tension in all conductors being pulled out. A lower strength of the structure can be accepted if well documented calculation proves this to be justifiable, but never less than 1,45 times the load. The tension shall be taken for the lowest temperature allowed during the sagging. With the factors given above, this can lead to large forces as compared to those that can occur for ice and wind loads. In such cases it is acceptable to suppose lower conductor tension than given above, provided that well documented calculation proves this to be justifiable and the work is carefully controlled. However, the strength of the structure must at least be 1,45 times the action corresponding to the calculated tension.

NO 1.2.2 Vertical loads
The increased vertical component of the conductor tension due to the angle the conductor makes in a vertical plane through the attachment point, shall be taken into account. This may be of practical significance especially if the tower is situated at a high level in the terrain in a long declined section. The vertical load will be increased if stringing equipment and/or temporary anchoring is placed close to the tower

NO 1.2.3 Transvers loads
Angle towers shall be designed to resist transvers loads due to conductor tension as described in 2.1. Possible wind loads should be considered.

NO 1.2.4 Longitudinal loads acting on temporary anchorage towers and dead end towers
Towers used as anchorage towers/dead end towers during stringing and sagging shall be designed to take up loads as described in 2.1 for all combinations of loads - or no load - in the many attachment points representing the stringing succession.

Such towers can be strengthened (reinforced) by use of guy wires to obtain the needed longitudinal strength. These guy wires will increase the vertical loads in the attachment points and should be prestretched if they are attached to stiff towers. It is therefore needed to check the tension in the guy wires and take into account the vertical loads in the attachment points.

NO 1.2.5 Longitudinal loads acting on tangent towers
It should be taken into account that a longitudinal load will act on a tangent tower when the conductor is in the stringing pulleys.

Clause National regulation

NO 1.3 Maintenance loads

All attachment points shall be designed to take up the double of the vertical load normally caused by the sagging. A lower strength of the attachment points can be accepted if well documented calculation proves this to be justifiable, but never less than 1,45 times the mentioned load.

4.2.7 (ncpt) *NO.1 Security Loads*

Following apply:

Load cases are specified to give minimum requirements to the resistance of the towers by giving failure containment loads. All attachment points for phase conductors and ground wires shall be checked against conductor/wire breakage. This can be done by taking the one-sided tension of a conductor equal to the sagging tension without wind or ice loading, however taking into account the relaxation due to any swing of the insulator assemblies, deflection or torsion of tower, foundation, hinged cross arms or hinged columns, and interaction with other phase conductors and/or ground wires. For over head lines with short insulator strings or pin insulators, this can lead to unreasonably large longitudinal forces. In such cases the longitudinal load has to be specifically evaluated to reduce the damages of the overhead line in case of a possible conductor breakage. The one-sided tension can be limited by certain devices (e.g. friction clamps). Then the minimum requirements can be reduced correspondingly.

Unbalanced tension in the other conductors is not to be considered. For certain over head lines stronger security may be required. This can be done by considering more load cases by increasing the number of attachment points in the tower exposed to one-sided tension, and exposing the tower to torsional loads which it has to withstand. This requirement is especially advisable for over head lines with two or more circuits. Sectioning by using more anchorage towers is a security measure to be required in the case of important power lines in regions with severe icing.

4.2.8 (ncpt) *NO.1 Short circuit loads*

This may be included in the project specification.

4.2.9.1 (ncpt) *NO.1 Avalanches, creeping snow*

Research is going on in this field, and measures to be taken are included in the project specification if deemed necessary.

4.2.9.2 (ncpt) *NO.1 Earth quakes*

Not considered in Norway.

Clause National regulation

4.2.10 *NO.1 Load cases*
(snc/ncpt)

The following apply:
Calculations shall be based on the ice and wind loads and temperature actions as given in 4.2.2, 4.2.3, 4.2.4 and 4.2.5 of Part 1, taking into account the Norwegian NNA. This implies that to arrive at the reference values, the tabulated 50 year values for wind and ice loads have to be multiplied with conversion factors according to the chosen reliability class.
Calculations shall be based on the real components of the loads, vertical, transvers and longitudinal, in the different load cases. Weight of towers, conductors, insulators and accessories shall be taken into account in all load cases. Swings of insulators, accessories and towers as well as interactions with other phases and conductors shall be taken into account in all load cases.
Wind and ice loads directly on towers and guy wires shall be considered.
It is distinguished between following types of towers according to their function:

- suspension towers and angle suspension towers (B+VB)
- anchorage towers and angle anchorage towers (F+VF)
- dead end towers and angle dead end towers (E+VE)

The different load cases to be considered, are shown in Table 4.2.10 (NO).

Table 4.2.10/NO - Load cases (cont.)

Load cases	Description of load cases	Valid for tower type	Remark
Uniform ice load	The reference value g_R is applied uniformly on all conductors and ground wires on all spans in the section.	All	
Transvers bending	An ice load equal to 0,7 times the reference value is applied on all conductors and spans on one side (transversally) of the tower and an ice load 0,3 times the reference value on the other, see Figure NO.1.	All	
Unbalanced ice load. Longi-tudinal bending	An ice load equal to 0,7 times the reference value is applied on all conductors in 3 consecutive spans of a section and an ice load 0,3 times the reference value on all the other spans of the section. All load cases arising when the "load train" with the 3 spans is moved along the section between the anchorage towers, see Figures NO.2 and NO.3 are to be checked.	B+VB	
Wind load	The wind load is applied on all conductors and ground wires as well as insulators, accessories and towers.	All	
Combined wind and ice load	The wind is applied on ice covered conductors, insulators and towers and the resulting wind load is combined with the ice load.	All	
Load at the minimum temperature	The towers shall resist 1,45 times the increased conductor tension at the minimum temperature	VB, F+VF E+VE	

Clause National regulation

Table 4.2.10/NO Load cases (2/2)

Load cases	Description of load cases	Valid for tower type	Remark
Construction and maintenance loads	It is to be checked that the towers can resist 1,45 times all forces due to the loads as described in 4.2.6 including the Norwegian NNA. The action on members (force or moment) shall be multiplied by 1,45 and checked against yield/buckling of the member.	All	
Conductor breakage	The load to take into account due to conductor breakage is described in 4.1.7 with the Norwegian NNA. The original conductor tension is taken as the sagging tension at 0 °C. The breakage is taken to be in the conductor giving the most unfavourable action in the induvidual member.	B+VB	
Conductor breakage with full ice load	The load to be taken into account is due to a conductor breakage with an ice load equal to the reference value g_R on all other conductors and ground wires.The reduction of the vertical load and of possible angle tension due to the breakage shall be taken into account.	F+VF	

4.2.11 *NO.1 Partial factors for actions*
(ncpt) Ref. Table 4.2.11.1 in Part 1.

γ_p = 1,45 for good quality control of design and construction, else = 2,0

Clause National regulation

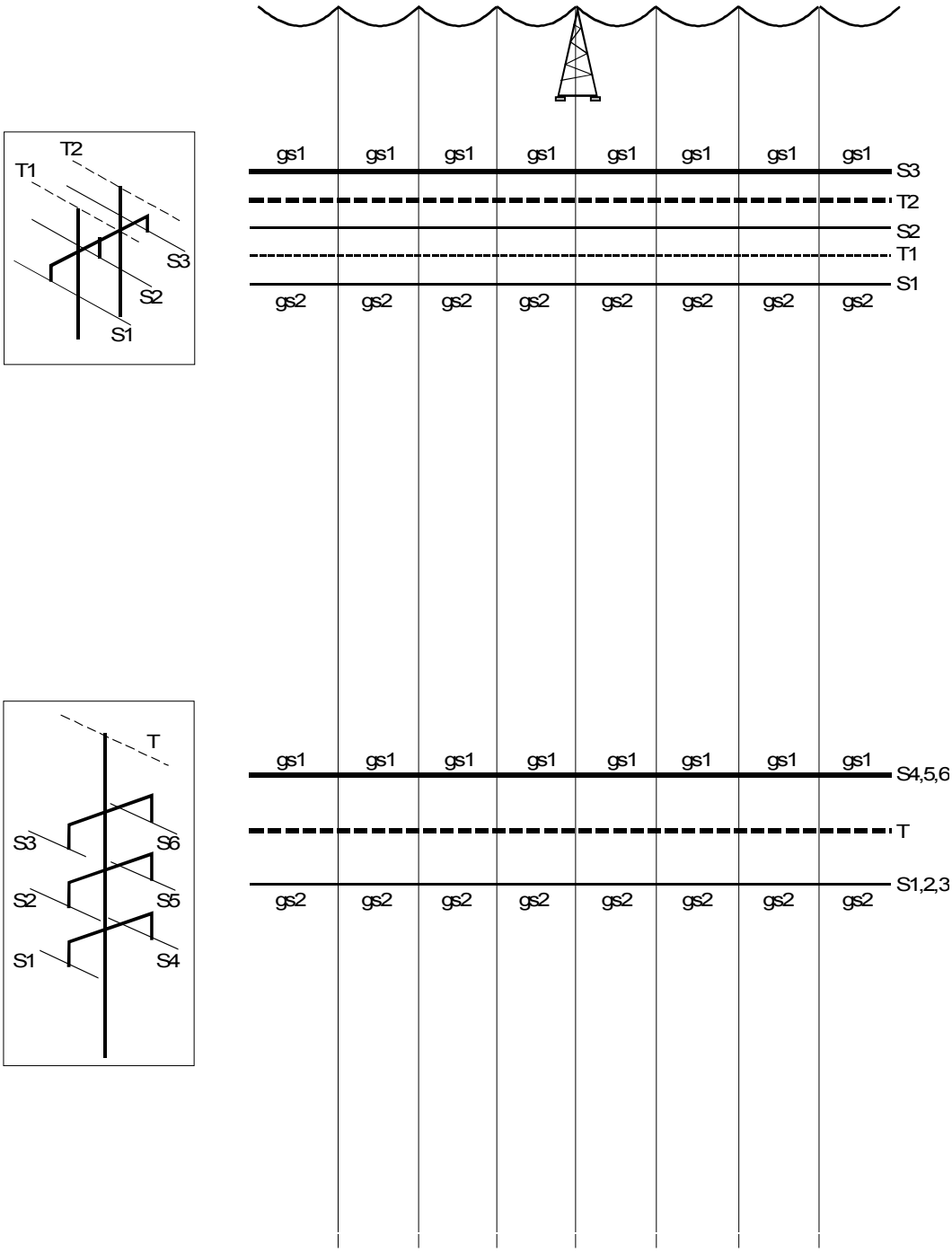

Figure 4.2.10 / NO.1

Ice loads giving transverse bending. The value of the ice loads are:
g_{s1} = 0,7 g_R, g_{s2} = 0,3 g_R where g_R is the reference value for max. ice load.

Clause National regulation

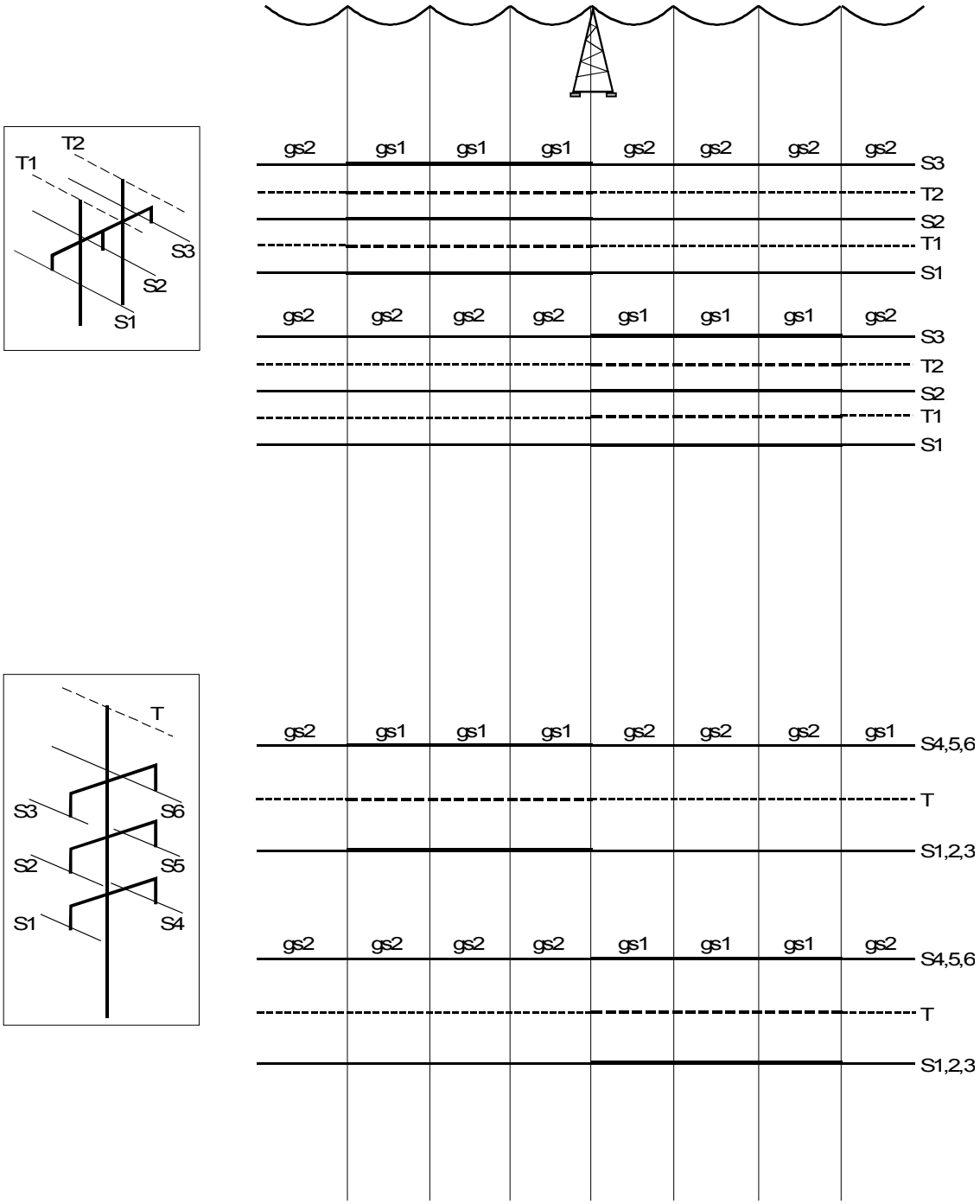

Figure 4.2.10 / NO.2

Unbalanced ice loads giving longitudinale values of the ice loads are:
g_{s1} = 0,7 g_R, g_{s2} = 0,3 g_R where g_R is the reference value for max. ice load.

Clause National regulation

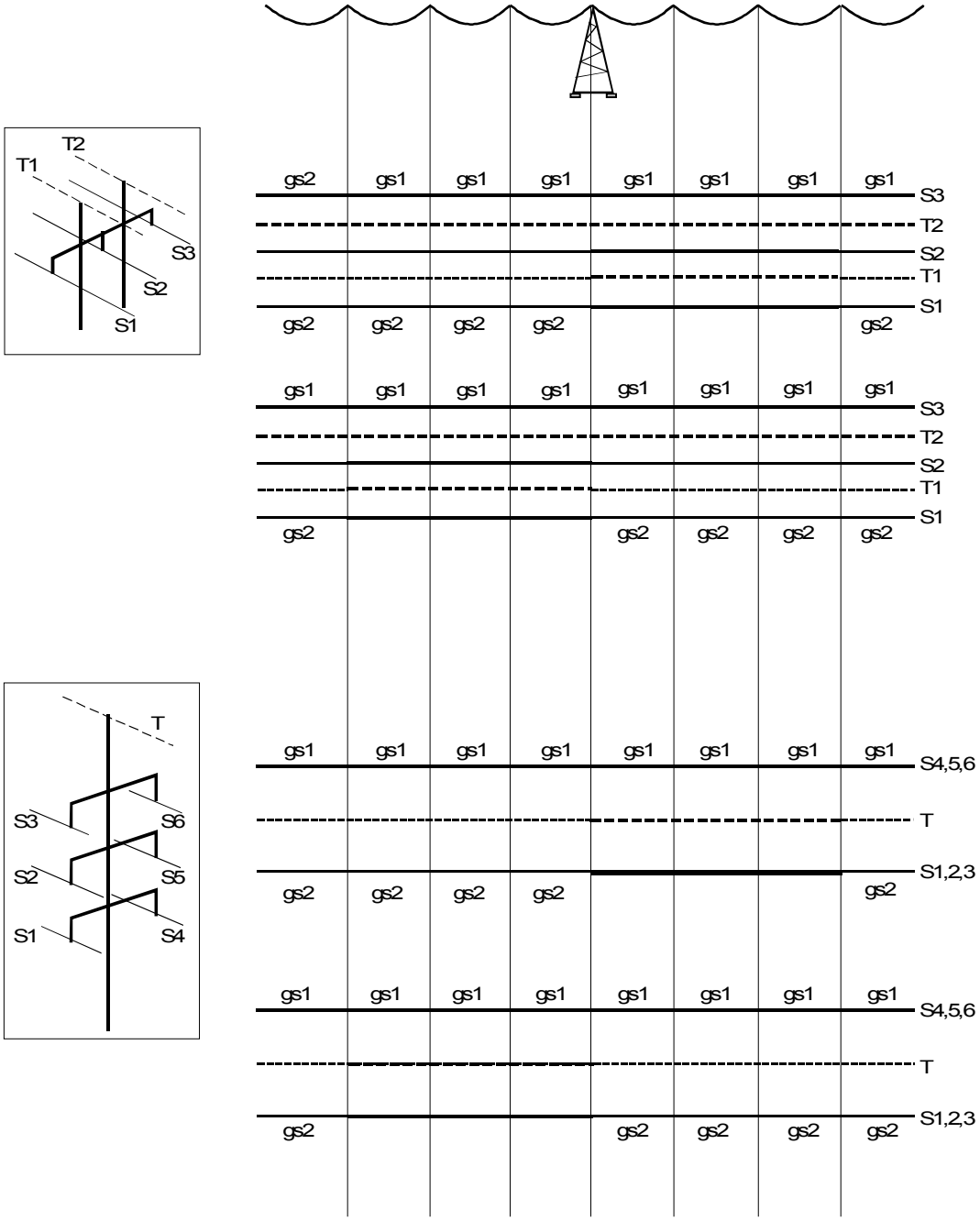

Figure 4.2.10 / NO.3

Unbalanced ice loads giving torsion. The values of the ice loads are:
g_{s1} = 0,7 g_R, g_{s2} = 0,3 g_R where g_R is the reference value for max. ice load.

Clause National regulation

5 Electrical requirements

5.1 NO.1 Voltage classification
(ncpt) Applies with the following changes

5.2 NO.1 Currents
(ncpt) Applies with the following changes

5.2.1 NO.1 Normal current
(ncpt)

The normal current is dependent on the magnitude of the transmitted power and on the operating voltage. The cross-section of the phase conductors shall be chosen so that the design maximum temperature for the conductor material is not exceeded under the specified conditions defined in the Project Specification.

5.3 NO.1 Insulation co-ordination
Applies with the following changes

5.3.5.2 NO.1 Result of calculation using method in annex E
(A-dev) The last paragraph shall read:
All these minimum electrical clearance distances are solely based on insulation co-ordination requirements. Other requirements may result in substantially larger clearances.

5.4 NO.1 Internal and external clearances
Applies with the following changes

5.4.2.2.1 NO 1.1 Maximum conductor temperature
(ncpt)

The maximum conductor temperature shall be specified in the Project Specification and shall not be less than 50°C.

5.4.2.2.1.1 NO.1.2 Maximum earth wire temperature
(ncpt)

The maximum earth wire temperature shall be specified in the Project Specification, and shall not be less than 40°C.

5.4.2.2.2 NO.1.2 Ice load for determination of electrical clearances
(ncpt)

The return period shall be specified in the Project Specification, but not less than 50 years.

5.4.2.2.3 NO.1.3.1 Wind load for determination of electrical clearances
(ncpt)

The last sentence in the paragraph beginning with “Under wind loading - - - -“does not apply.

5.4.2.2.3 NO.1.3.2 Wind load for determination of electrical clearances
(A-dev)

The last sentence in paragraph *b)* shall read: National requirements are defined in Table: 5.4.3 Clearances within the span and at the tower.

5.4.2.2.3 NO 1.3.3 Wind load for determination of electrical clearances
(A-dev)

The last sentence in paragraph *d)* does not apply.

Clause National regulation

5.4.2.2.3 *NO.1.3.4 Wind load for determination of external electrical clearance*
(A-dev)

The return period shall be specified in the Project Specification, but not less than 50 years for permanent loads.

5.4.3 NO.1 Clearances within the span and at the tower

5.4.3.1 *NO.1 Clearances within the span*
(ncpt)

Conductors in the same horizontal plane should have a minimum clearance within the span of:

$$x = k_2 * \sqrt{b + l_k} + 0{,}007 * U_S$$

b is the sag (m)
l_k is the insulator length (m) for I-string. For V-chains l_k=0
U_s is the highest system voltage (kV)
k_2 is $V_h/60 \geq 0{,}50$ for strain or post insulators
k_2 is $V_h/55 \geq 0{,}55$ for suspension insulators

Conductors with a vertical separation should be controlled for a loadcase with ice on the upper conductor and 0°C and no ice on the lower conductor while both conductors also are subjected to wind. The ice- and windload in this case should have a 3-year return period. The vertical separation between earth wire and conductor should be controlled likewise.

5.4.3/NO Clearances within the span and at the tower

Table 5.4.3/NO - Minimum clearances within the span and at the tower

(A-dev)

Load case	Clearance cases				Remarks
	Within the span		At the tower		
	Conductor conductor	Conductor earth-wire	Between phases and/or circuits	Between phase conductors and earthed parts	
Max. temperature	D_{pp}	D_{el}	D_{pp}	D_{el}	Load conditions in still air
Ice load	D_{pp}	D_{el}	D_{pp}	D_{el}	Load conditions in still air
Wind load Wind load at overvoltage	$k_1 \cdot D_{pp}$	$k_1 \cdot D_{el}$	$k_1 \cdot D_{pp}$	$k_1 \cdot D_{el}$ D_{el}	The factor k_1 is dependent on mechanical loading conditions, but should not be less than 0,6
NOTE Wind load at overvoltage is 30% of wind load.					

5.4.4/NO Clearances to the ground in areas remote from buildings, roads, railways and navigable waterways and clearance to trees

These basic electrical clearances are considered in tables 5.4.4/NO, 5.4.5.2/NO, 5.4.5.3.1/NO, 5.4.5.3.2/NO, 5.4.5.4/NO and 5.4.5.5/NO in accordance with EN 50341-3-16 and from Empirical Method in 5.3.5.1 in EN 50341-1.

Table 5.4.4/NO - Minimum clearances to the ground in areas remote from buildings, roads, railways and navigable waterways and clearance to trees

(A-dev)

Load case	Clearance to ground in unobstructed countryside		Clearance to trees
	Normal ground profile	Rockface or steep slope	
Max. temperature	5,5 m + D_{el} but > 6 m earth wire > 4 m	4 m + D_{el} but > 4,5 m earth wire > 3 m	2 m + D_{el} but > 3 m earth wire >1,5 m
Ice load	3,5 m + D_{el} but > 4 m earth wire > 3 m	4 m + D_{el} but > 4,5 m earth wire > 3 m	2 m + D_{el} but > 3 m earth wire > 1,5 m
Wind load	5,5 m + D_{el} but > 6 m earth wire > 4 m	2,5 m + D_{el} but > 3 m earth wire > 2 m	2 m + D_{el} but > 3 m earth wire > 1,5 m
Remarks	Basic requirement is that a vehicle or person etc. can pass under the line without danger. When that case does not apply (steep slope etc) clearance may be reduced consistent with the requirement that safety of persons shall be ensured.		If the risk of causing an earth fault due to a falling tree is unacceptable, then the height of the trees must be reduced or their horizontal proximity to the line shall be limited
Remarks	Rockface or steep slope that is not accessible with any kind of vehicle, tractor, snowmobile etc.		
Remarks	If snow depths normally are greater than 1 m, clearances to ground shall be increased accordingly.		

Clause National regulation

5.4.5 *NO.1 Clearances to buildings, traffic routes, other lines and recreational areas*

5.4.5.1 *NO.1 General*
(A-dev)

Paragraph a) shall read:

Clearances to residential and other buildings when the line is above or adjacent to the buildings or near antenna or similar structures. Crossing over important buildings is not permitted (see Table 5.4.5.2)

5.4.5.1 *NO.2 General*
(A-dev)

The note at the end of the clause shall read:

NOTE Due to the increased safety requirements for crossing over buildings, recreational areas, traffic routes, other power lines and telecommunication lines etc., consideration should be given to the use of reinforced suspension such as multiple insulator strings where there is considered to be possibility of mechanical failure in the suspension. Special requirements may be given in regulations.

5.4.5.2/NO: Residential and other buildings and structures

Table 5.4.5.2/NO Minimum clearances to residential and other buildings and structures

(A-dev)

Load cases	Clearances cases		
	Direct clearance to less important buildings (Crossing over important buildings is prohibited)	Horizontal clearance to important buildings, classified areas of petrol stations, storage areas for explosives and particularly flammable goods and other storage areas	Direct clearance to antennas, street lamps, flag poles, advertising signs and similar structures
Max. temperature	4,5 m + D_{el} but > 5 m earth wire > 3 m	5,5 m + D_{el} but > 6 m earth wire > 6 m	3,5 m + D_{el} but > 4 m earth wire > 2 m
Ice load	3,5 m + D_{el} but > 4 m earth wire > 3 m	5,5 m + D_{el} but > 6 m earth wire > 6 m	2,5 m + D_{el} but > 3 m earth wire > 2 m
Wind load	2,5 m + D_{el} but > 3 m earth wire > 2 m	3,5 m + D_{el} but > 4 m earth wire > 4 m	1,5 m + D_{el} but > 2 m earth wire > 2 m
Remarks		These clearances also apply for high constructions for which special regulations do not apply	
Remarks	Less important buildings are defined as buildings less than approximately 50 m^2 which are not used for living and which only occasionally are used by human beings. (The above applies to small sheds, small barns etc, but also applies to garages for one or two cars at a distance of at least 2 m from other buildings and semi-detached garages constructed from non-combustible materials not higher than 3 m and situated at least 4 m from other buildings).		
Remarks	The danger of ice falling from overhead lines on buildings shall be considered.		
	NOTE 1 Crossing over residential buildings etc. is prohibited. The responsible national authorities may accept crossing over other important buildings on application. Specially safety measures will be required.		
	NOTE 2 For lines adjacent to or crossing over power stations or substations special regulations apply.		
Remarks	The minimum swing angle of the conductor is 45°.		

5.4.5.3./NO Traffic routes

Table 5.4.5.3.1/NO Minimum clearances to line crossing roads, railways, navigable waterways and rope way installations

(A-dev)

Load case	Clearances cases				
	To road surface, parking lot, pavement etc, bicycle path and top of rail level (if no electric traction system is used)	To components of el.traction systems of railways, trolley bus lines or rope ways	To pulling ropes of rope ways	To an agreed gauge of a recognised navigable waterway	To towers or supporting and pulling ropes of a ropeway installation
Max. temperature	6,5 m + D_{el} but > 7 m, earth wire > 6 m	3,5 m + D_{el} but > 4 m, e.w. > 3m	5,5 m + D_{el} but > 6 m	2 m + D_{el} earth wire > 2 m	3,5 m + D_{el} but > 4 m
Ice load	6,5 m + D_{el} but > 7m, earth wire > 6 m	3,5 m + D_{el} but > 4 m, e.w. > 3m	5,5 m + D_{el} but > 6 m	2 m + D_{el} earth wire > 2 m	3,5 m + D_{el} but > 4 m
Wind load	6,5 m + D_{el} but > 7 m, earth wire > 6 m	3,5 m + D_{el} but > 4 m, e.w. > 3m	5,5 m + D_{el} but > 6 m	2 m + D_{el} earth wire > 2 m	3,5 m + D_{el} but > 4 m
(SLC1) Special load case	-	3,5 m + D_{el} but > 4 m	5,5 m + D_{el} but > 6 m	-	
(SLC2) Special load case	-	-	5,5 m + D_{el} but > 6 m	-	
Remarks		See Table 5.4.5.3.2			
Remarks	Problems in connection with induction and with safety clearances at work are not considered				

SLC1: Swinging of the over crossing conductors due to varying wind loads at a temperature defined in NNAs and simultaneous loading of the undercrossing conductor of the traction system at its minimum sag.

SLC2: Swinging of the over crossing conductor due to varying wind loads at a temperature defined in NNAs and maximum tensile stress of the pulling rope increased by 25%. In evaluating horizontal clearances the following load cases shall be considered:

- Swinging of the conductor due to wind towards fixed components of the ropeway installation
- Swinging of ropes of the ropeway installation at maximum swing angle 45° towards parts of the overhead line

NOTE 1 Clearances to the earth wire in this table can be reduced with 1m compared to clearances to the phase conductor, unless otherwise stated.
NOTE 2 For clearances from the rail level, the clearance should be fixed with respect to the gauge of the train rather than the top of the rail level.
NOTE 3 If occasionally very high loads occur, for these occasions smaller clearances may be used. In the case of crossing a railway without electric traction system clearances should be agreed by the railway authorities when conversion to an overhead traction system is planned.

Table 5.4.5.3.2/NO

Table 5.4.5.3.2/NO Minimum horizontal clearances to line near roads, railways, navigable waterways and rope way installations

(A-dev)

Load case	Horizontal clearance cases		
	Clearance between nearest part of the overhead line and the centre line of the nearest track of a railway	To outer edge of a carriageway (incl. hard shoulder) of a motorway, highway, country road or of a waterway	To components of a ropeway installation
Max. temperature	8 m	2 m + D_{el}, earth wire > 2 m.	6 m + D_{el}
Ice load	8 m	2 m + D_{el}, earth wire > 2 m.	6 m + D_{el}
Wind load	5 m	2 m + D_{el}, earth wire > 2 m.	4 m + D_{el}
(SLC4) Special load case		-	4 m + D_{el}
Remarks	If this horizontal clearance cannot be met then the vertical clearance in Table 5.4.5.3.1 shall apply		
Remarks	Problems in connection with induction and with safety clearances at work are not considered		
SLC4: Additionally it shall be assumed that the supporting and pulling ropes of a rope way installation swing through an angle of 45° towards the overhead line.			

5.4.5.4/NO Power lines or overhead telecommunication lines

Table 5.4.5.4/NO Minimum clearances to other power lines or overhead telecommunication lines

(A-dev)

Load case	Crossing of lines		Horizontal clearance between parallel lines of separate utilities on common structures and between parallel or converging lines on separate structures
	Vertical clearance between lowest conductor of the upper circuit and live parts or earthed components of the lower line	Horizontal clearance between the vertical axis at the swung conductor and components of telecommunication lines	
Max. temperature	1 m + D_{pp}, but > 3 m earth wire > 2 m	-	D_{pp}, but > 1 m earth wire > 1 m.
Ice load	1 m + D_{pp}, but > 3 m earth wire > 2 m	-	D_{pp}, but > 1 m earth wire > 1 m
Wind load	1 m + D_{pp}, but > 3 m earth wire > 2 m	1 m + D_{pp}, but > 2 m earth wire > 1 m	D_{pp}, but > 1 m earth wire > 1 m.
Remarks	Where D_{pp} is the greater of the two lines	If this horizontal clearance can not be met, the vertical clearance between lowest conductor of the upper circuit and live parts or earthed components of the lower line shall apply	
Remarks	Problems in connection with induction and with safety clearances at work are not considered		
Remarks	Special care shall be taken with respect to crossing of lines and parallel lines. The clearance shall be greater than 1,1 times the arcing distance (defined as the straight line distance between live and earthed parts) of the insulator string.		
Remarks	When calculating the vertical difference between circuits, the nearest parts of the underlying circuit shall have a minimum temperature as mentioned in this standard.		
Remarks	When calculating the direct clearance between parallel or converging lines, it is recommended that a difference of 40 percentage points of the specified wind load is applied on the two lines, and that a sufficient number of gradual reductions of the specified wind load is controlled.		

5.4.5.5/NO: Recreational areas (playgrounds, sports areas etc).

Table 5.4.5.5/NO Minimum clearances to recreational areas playgrounds, sports areas etc.)

(A-dev)

Load cases	Horizontal clearances (Crossing of important sports- and recreational areas etc. is prohibited)	
	To permanent sports facilities and spectator accommodations for these, children's playgrounds and graveyards	Clearance to camping grounds, public swimming pools
Max. temperature	5,5 m + D_{el} but > 6 m earth wire > 6 m.	2 m + D_{el} but > 2,5 m earth wire > 2,5 m.
Ice load	5,5 m + D_{el} but > 6 m, earth wire > 6 m	2 m + D_{el} but > 2,5 m, ew > 2,5
Wind load	3,5 m + D_{el} but > 4 m, earth wire > 4 m	0,5 m + D_{el} but > 1 m. ew > 1
Remarks	For sport facilities etc. the above requirements apply to the sports ground itself, start and winning post installations and the spectator areas for these, but not to other areas as greens with trees etc. Crossings are accepted over private tennis courts, golf courses, alpine courses, motorcross, go-cart tracks and tracks for horse riding without spectator accommodation. Excessively high powerlines are permitted to cross over other sports facilities where there are no spectator accommodation.	
Remarks	For dangerous areas for shooting ranges there are special regulations issued by the Ministry of Justice	
Remarks	For the crossing of areas as national parks and other preserved areas a special permission is required from the authorities concerned	
Remarks	Crossing of fjords, valleys etc. which may represent a hazard to aviation need a permission from the Civil Aviation Administration	

Clause National regulation

5.5 NO.1 Corona effect

Applies without changes

5.6 NO.1 Electric and magnetic fields

Applies with the following changes

5.6.3 *NO.1 Interference with telecommunication circuits*
(A-dev)

The sentence “Rules for interference on telecommunication circuits are outside the scope of this standard” is to be added before the second paragraph.

6 Earthing systems

6.1 NO.1 Purpose

Applies without changes

6.2 NO.1 Dimensioning of earthing systems at power frequency

Applies with the following changes

6.2.2.2 *NO.1 Earthing and bonding conductors*
(snc)

The sentence “Aluminium and aluminium alloys are only permitted above ground” is to be added before the note.

6.2.4.1 *NO.1 Permissible values*
(A-dev)

The last paragraph shall be omitted.

6.2.4.4 *NO 1 Measures in systems with isolated neutral or resonant earthing*
(A-dev)

Does not apply in Norway

6.3 NO.1 Construction of earthing systems

Applies with the following changes

6.3.2 *NO.1 Transferred potentials*
(A-dev)

The first paragraph shall read:

The transfer of potential may occur due to metallic pipes and fences, low voltage cables etc. and general guidelines are difficult to provide. Requirements of limit values of transferred potentials are given in Norwegian regulations and standards.

6.4 NO.1 Earthing measures against lighting effects

Applies without changes

Clause National regulation

6.5 NO.1 Measurements for and on earthing systems

Applies without changes

6.6 NO.1 Site inspection and documentation of earthing systems

Applies without changes

7 Supports

7.2 NO.1 Materials
(ncpt)

Materials shall be selected according to the Project Specification.

7.3 NO.1 Lattice steel powers
(ncpt)

Maximum slenderness of members shall be given in the Project Specification.
Minimum thickness of plates shall be given in the Project Specification.
Minimum thickness of main members shall be 5 mm and for redundant members 4 mm

Minimum thickness for hollow sections shall be 4 mm.
By hollow sections care shall be taken for drainage.
A bracing bar can be attached by one bolt.
Shaping in cold condition is only permitted when tests show that the material withstands cold forming without developing cracks or dangerous stresses occurs which otherwise in conjunction with subsequent hot dip galvanising can cause inter crystalline crack formation.

Holes for bolts may normally be punched in angles and plates up to 12 mm thickness. The effect of local material conditions shall be taken into account.
The eccentricity of end connections shall be kept as small as possible.

7.3.5 NO.1 Ultimate limit states

7.3.5.1 NO.1 Basis

7.3.5.1.1 NO.1 General
(ncpt)

The partial safety factor γ shall be taken as follow:

- resistance of cross sections of members $\gamma m1 = 1,10$
- resistance of members to buckling $\gamma m1 = 1,10$
- resistance of net section of members at bolt holes $\gamma m2 = 1,25$

7.3.5.4 NO.1 Resistance of lattice members
(ncpt)

Unless otherwise stated in the Project Specification the resistance of cross sections against tension, compression and bending, and the buckling resistance of members shall be determined in accordance with normative annex J.

Clause National regulation

7.3.6 NO.1 Connections

7.3.6.1 NO.1 Basis

7.3.6.1.1 NO.1 General
(ncpt)

The partial safety factor γm shall be taken as follow:

- resistance of bolted connections $\gamma mb = 1,25$
- resistance of riveted connections $\gamma mr = 1,25$
- resistance of welded connections $\gamma mw = 1,25$

7.5 NO.1 Timber poles

7.5.1 NO.1 General
(ncpt)

The requirements of ENV 1995-1-1: Eurocode 5- Design of timber structures, and of the National Application Document- Common unified rules will be complied with, except where otherwise specified in the documents CEN / TC 124 "Timber Structures".

7.5.5.1 NO.1 Basis
(ncpt)

The partial safety factor shall be taken as follows:

- resistance of cross sections and elements $\gamma m = 1,35$
- resistance of bolted connections $\gamma m = 1,10$

7.5.6 NO.1 Resistance of connections
(ncpt)

The design resistance of bolts in shear or tension are given in the National Application Document relating to ENV 1995-1-1: Eurocode 5.

7.7 NO.1 Guyed structures

7.7.5.1 NO.1 Basis
(ncpt)

The partial safety factor γm for guys regarding resistance to ultimate strength shall be 1,50 unless otherwise stated in the Project Specification.

7.9 NO.1 Corrosion protection and finishes

7.9.2 NO.1 Galvanising
(ncpt)

Galvanising of steel parts including guys shall be according to the Project Specification.

7.9.7 NO.1 Protection of timber poles
(ncpt)

Timber poles, glue laminated wood poles and timber sleepers shall be impregnated in accordance with the Norwegian Standard NS-INSTA 140 kl.A and the Project Specification.

Clause National regulation

7.10 NO.1 Maintenance facilities

7.10.2 NO.1 Maintainability
(ncpt)

Steps (of any kind) shall be rated for a concentrated ultimate load of 1,5 kN acting vertically at a structurally unfourable position (Ref. Actions on Lines 4.2.6.2)

8 Foundations

8.5 NO.1 Geotechnical design

8.5.2 NO.1 Geotechnical design by calculation
(ncpt)

If not otherwise stated in the Project Specification, separate footings in the form of symmetrical foundations plates and vertical shaft can be designed using the following method:

Uplift:

1) Choose foundation depth (D), and foundation width (B).

2) The uplift bearing resistance factor N_{ul} can be found as:

$$N_{ul} = \tan\rho\,[\frac{2-\beta/30}{1+\tan^2\rho} + \frac{\beta/30}{N+2\tan^2\rho}]\frac{D}{B} + 1$$

$$N = \frac{1+\sin\rho}{1-\sin\rho}$$

The recommended effective soil strength parameters (a,tanρ) can be found in Table 8.5.2/NO. β is the angle (in degrees) of the inclined load Q_d relative to the vertical axis (see Fig. 8.5.2/NO). Q_d is design load in ULS-condition including a load factor γ_l = 1.3.

3) Calculate the vertical uplift capacity (F_{vd}) for the chosen geometry:

$$F_{vd} = B^2[N_{ul}\gamma_a' D + 2a(N_{ul}-1)]$$

4) Increase/decrease either B or D to find new values of N_{ul}, calculate new values of F_{vd} until the requirement $F_{vd} > Q_{vd}$ is satisfied.

Q_{vd} = vertical component of design load = $Q_d \cdot \cos\beta$		[kN]
γ_a' = average effective unit weight = $(\gamma \cdot z_w + (\gamma' \cdot (D-z_w)) \cdot (1/D)$		[kN/m^3]
D = depth to foundation level		[m]
z_w = depth to ground water level	$(0 \leq z_w \leq D)$	[m]
γ = total unit weight of soil		[kN/m^3]
γ' = submerged unit weight of soil		[kN/m^3]

NOTE The above procedure can only be applied for β<30°
The height of the foundation shaft above terrain is foreseen to be typically 0,3-0,5 m. If the height is greater than 0,5 m this should be paid special attention.

Clause National regulation

Compression:

The vertical bearing capacity can be found for B and D determined for uplift as:

$$F_{cd} = \sigma_n' \cdot A_0 = (N_q - 1)(\gamma' C_1 B + \gamma_a' D + a) \cdot A_0$$

The shape factor C_1 can be found as:

$$C_1 = \frac{N_q N_\gamma}{2(N_q - 1)^2}(1 - 2\frac{D}{B}\tan\beta)$$

where $$N_\gamma \approx (N_q - 1)\frac{1 + 2\tan\rho}{2 - \tan^2\rho}$$

$$N_q = N \cdot e^{\pi \tan\rho}$$

Non-verticality of the loading is taken into account by the reduced area ($A_0 = B_y \cdot B_x$) of the foundation plate.

1) Non-verticality in one direction $B_{x(y)} = B(1-2(D/B)\tan\beta_{x(y)})$ (see Fig.8.5.2/NO)

Check that $F_{cd} = \sigma_n' \cdot B_{x(y)} \cdot B > Q_d \cdot \cos\beta_{x(y)}$

2) Non-verticality in both directions $B_y = B(1-2(D/B)\tan\beta_y)$ (see Fig.8.5.2/NO)
$B_x = B(1-2(D/B)\tan\beta_x)$ (see Fig.8.5.2/NO)

Check that $F_{cd} = \sigma_n' \cdot B_y \cdot B_x > Q_d \cdot \cos\beta$

Q_d is design load calculated in ULS-condition including a load factor γ_l = 1,3. The risk of dangerous settlement shall be considered.

Table 8.5.2/NO - Recommended soil parameters

Loading type		Uplift		Compression		Unit weight	
Soil type	Comp.	Attraction a	Friction tanρ	Attraction a	Friction tanρ	Effective γ'	Total γ
		kN/m²	-	kN/m²	-	kN/m³	kN/m³
Clay	Soft	5	0,30	5	0,20	7	17
	Firm	10	0,50	10	0,35	8	18
Silt	-	0	0,55	5	0,35	8	18
Sand	Loose	0	0,60	0	0,40	8	18
	Firm	0	0,75	10	0,55	9	19
Gravel	Loose	0	0,70	0	0,50	9	19
	Firm	0	0,85	5	0,60	10	20

Clause National regulation

The recommended values of effective soil parameters (a, tanρ) are conservatively assumed. It is recommended to perform geotechnical soil investigations to obtain the design soil parameters. In case of no geotechnical investigations the parameters in Table 8.5.2/NO can be used. The adequacy of the back-filled material shall be based on good material handling possibilities, and achieving adequate engineering properties after compaction.

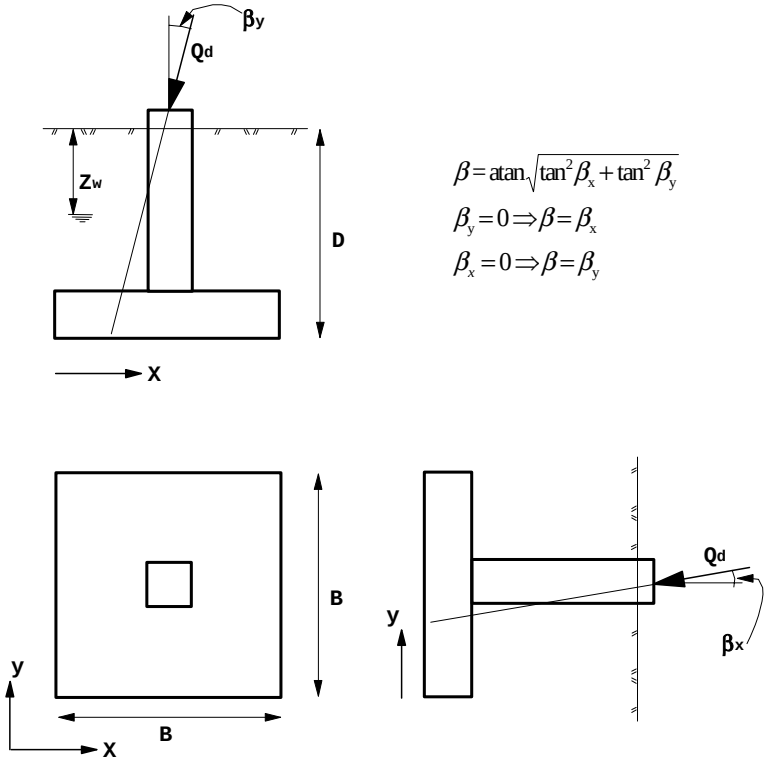

$$\beta = \operatorname{atan}\sqrt{\tan^2\beta_x + \tan^2\beta_y}$$

$$\beta_y = 0 \Rightarrow \beta = \beta_x$$

$$\beta_x = 0 \Rightarrow \beta = \beta_y$$

Figure 8.5.2/NO

9 Conductors, earthwires and telecommunication cables

10 Insulators

11 Live equipments – Overhead line fittings

12 Checks, taking over and documentation/Quality assurance

National Normative Aspects (NNA)

for

SWEDEN

based on EN 50341-1:2001

Version circulated with corrigendum April 2006.

In this document, the paragraphs modified/added by the corrigendum April 2006 are identified by a vertical line in the left margin of the text.

Contents

page

Foreword 7

1 Scope 8

2 Definitions, symbols and references 8

2.1 SE.1 Similar conductors 8

2.2 SE.1 List of symbols 8

2.3 SE.1 National normative laws, government regulations 9

3 Basis of design 12

3.2.2 SE.1 Reliability level 12

3.7.2 SE.1 13

4 Actions on lines 13

4.2.2.2 SE.1 Dynamic wind pressure 13

4.2.2.4.1 SE.1 Wind force on conductors 13

4.2.2.4.2 SE.1 Wind force on insulators 13

4.2.2.4.3 SE.1 For lattice support the drag coefficient is: 14

4.2.2.4.4 SE.1 For timber poles the wind load per metre is: 14

4.2.3.2 SE.1 Uniform ice load 15

4.2.3.3 SE.1 Ice forces on conductors 16

4.2.4.2 SE.1 The ice density is: ρ_I = 917,4 kg/m^3 16

4.2.4.3 SE.1 The wind at ice condition is the normal wind conditions given in 16

(snc) 4.2.2.2/SE.1.1 16

4.2.4.4 SE.1 Ice thickness at normal wind condition 16

4.2.5 SE.1 Temperature effects 16

4.2.6 SE.1 16

4.2.7 SE.1 Security loads 16

4.2.10.2 SE.1 17

4.2.11 SE.1 Partial factors for actions 20

5 Electrical requirements 21

5.3 SE.1 Insulation co-ordination, Insulation levels 21

5.3.3.2 SE.1 Power frequency voltage, Creepage distance of insulator set 24

5.3.3.3 SE.1 Slow front over-voltages, Combined insulation 25

5.3.3.4 SE.1 Fast front over-voltages, Combined insulation 25

5.4.2.2 SE.1 Load cases for calculation of clearances 25

5.4.3 SE.1 Clearances within the span 28

5.4.4 SE.1 Clearance in rural areas and not navigable waterways 35

5.4.5.1 SE.1 Clearance to buildings, recreational areas and traffic (ncpt) routes, General 37

5.4.5.2 SE.1 Line above buildings 37

5.4.5.3 SE.1 Traffic routes, Line crossing roads, railways and navigable waterways 38

5.4.5.4 SE.1 Other power lines or overhead telecommunication lines, Crossing of other lines 40

5.4.5.5 SE.1 Recreational areas (Playgrounds, Sports areas etc.) 43

6 Earthing systems 44

6.2.2.1 SE.1 Earth electrodes 44

6.2.2.2 SE.1 Earthing conductors 44

6.2.4.2 SE.1 Measures for the observance of permissible touch voltages 45

6.3 SE.1 Construction of earthing systems 45

6.3.1 SE.1 Installation of earth electrodes and earthing conductors 45

6.4 SE.1 Earthing measures against lightning effects 45

7 Supports 46

7.1 SE.1 Initial design considerations 46

7.2 SE.1 Materials 46

7.3.1 SE.1 Lattice steel towers, General 46

7.3.5.1.1 SE.1 General (Chapter 5.1.1) 47

7.3.6.1.1 SE.1 General (Chapter 6.1.1) 47

7.3.7 SE.1 Fabrication and erection (Chapter 7) 47

7.3.8 SE.1 Design assisted by testing (Chapter 8) 48

7.4 SE.1 Steel poles 48
7.4.5.1 SE.1 Basis (Chapter 5.1) 48
7.4.6.1 SE.1 Basis (Chapter 6.1) 48
7.4.7 SE.1 Fabrication and erection (Chapter 7) 48
7.4.8 SE.1 Design assisted by testing (Chapter 8) 49
7.5 SE.1 Timber poles 49
7.6.1 SE.1 Concrete poles, General 50
7.6.2 SE.1 Basis of design 51
7.6.3 SE.1 Materials 51
7.6.4 SE.1 Serviceability limit states 52
7.6.5 SE.1 Ultimate limit states 52
7.6.6 SE.1 Design assisted by testing 52
7.7.3 SE.1 Materials 53
7.7.5.1 SE.1 Basis (2) 53
7.7.5.2 SE.1 Calculation of internal forces and moments 53
7.7.5.3 SE.1 Second order analysis 53
7.7.6 SE.1 Design details for guys 53
7.8 SE.1 Other structures 53
7.9 SE.1 Corrosion protection and finishes, painting on steel 54
7.9.2 SE.1 Galvanising 54

Fe/Zn 95 54

Fe/Zn 115 54

Fe/Zn 215 54

7.9.3 SE.1 Metal spraying 55
7.9.7 SE.1 Protection of sleepers and gluelam poles 55
7.11 SE.1 Loading tests 55

8 Foundations 56

8.2 SE.1 General requirements 56
8.3 SE.1 Soil investigation 57

8.4 SE.1 Loads acting on the foundations 57

8.5.2 SE.1 Geotechnical design by calculation 57

8.5.3 SE.1 Geotechnical design by prescriptive measures 61

8.6 SE.1 Loading tests 62

8.7 SE.1 Structural design 62

8.8 SE.1 Construction and installation 63

9 Conductors and overhead earthwires (ground wires) with or without telecommunication circuits 63

9.2.1 SE.1 Characteristics and dimensions 63

9.2.3 SE.1 Conductor service temperatures and grease performance 63

9.2.4 SE.1 Mechanical requirements 64

9.2.5 SE.1 Corrosion protection 66

9.2.6 SE.1 Test requirements 66

9.3.1 SE.1 Characteristics and dimensions 66

9.3.3 SE.1 Conductor service temperatures and grease characteristics 66

9.3.4 SE.1 Mechanical requirements 66

9.4 SE.1 Copper based conductors 67

9.5.1 SE.1 Characteristics and dimensions 67

9.5.3 SE.1 Conductor service temperatures 67

9.5.4 SE.1 Mechanical requirements 67

9.6.2 SE.1 Partial factor for conductor 67

9.8 SE.1 Selection, delivery and installation of conductors 68

10 Insulators 68

10.2 SE.1 Standard electrical requirements 68

10.7 SE.1 Mechanical requirements 68

10.16 SE.1 Selection, delivery and installation of insulators 69

11 Line equipment - overhead line fittings 69

11.1 General 69

11.2.2 SE.1 Requirement applicable to current carrying fittings 69

11.6 SE.1 Mechanical requirements 69

11.7 SE.1 Durability requirements 70
11.14 SE.1 Selection, delivery and installation of fittings 70
12 Quality assurance, Checks and taking-over 71
12.2 Checks and taking-over 71
Annex E 71
E.2 SE.1 Insulation co-ordination 71
Annex G 71
G.2 SE.1 Minimum dimension of earth electrode materials 71
Annex J 71
J SE.1 Lattice steel towers 71
J.5.1.1 SE.1 Flexural buckling 72
J.6.2.2 SE.1 Single members 72
J.6.3.1 SE.1 General 72
J.8 SE.1 Calculation of effective slenderness 72
J.9 SE.1 Selection of buckling cases for angles 72
Annex K 72
K.6 SE.1 Design of holding-down bolts - Table K.2 72
Annex M 72
M SE.1 Typical values of the geotechnical parameters of soils and rocks 72

Foreword

1 The Swedish National Committee (NC) is identified by the following address:

Svenska Elektriska Kommissionen - TK11 Overhead Lines
Box 1284
SE-164 29 KISTA
Telephone no.: +46 8 444 14 00
Facsimile no.: +46 8 444 14 30
E-mail sek@sekom.se

2 The Swedish NC has prepared this Part 3-18 of EN 50341, listing the Swedish national normative aspects, under the sole responsibility, and duly passed it through the CENELEC and CLC/TC 11 procedures.

NOTE The Swedish NC also take the sole responsibility for the technically correct co-ordination of this EN 50341-3-18 with EN 50341-1. It has performed the necessary checks in the frame of quality assurance/control. It is noted however that this quality assurance/control has been made in the framework of the general responsibility of a standard committee under the national laws/regulations.

3 This EN 50341-3-18 is normative in Sweden and informative in other countries.

4 This EN 50341-3-18 has to be read in conjunction with EN 50341-1, hereinafter referred to as Part 1. All clause numbers used in this Part 3-18 corresponds to those of Part 1. Specific subclauses, which are prefixed “SE”, are to be read as amendments to the relevant text in Part 1. Any necessary clarification regarding the application of Part 3-18 in conjunction with Part 1 shall be referred to the Swedish NC who will, in co-operation with CLC/TC 11 clarify the requirements.
When no reference is made in Part 3-18 to a specific subclause, then Part 1 applies.

5 In the case of “boxed values” defined in Part 1, amended values (if any) which are defined in Part 3-18 shall be taken into account in Sweden.
However any boxed value, whether in Part 1 or Part 3-18, shall not be amended in the direction of greater risk in a Project specification.

6 The Swedish NC declares in accordance with subclause 3.1 of Part 1 that this Part 3-18 follows the “General Approach” 4.1), and that consequently subclause 4.2 “Empirical Approach” is not applicable for Sweden.

7 The symbols used in Part 3-18 and not stated in Part 1 are identified/listed in 2.2/SE.1.

8 The national Swedish standards/regulations related to overhead electrical lines exceeding a nominal voltage of 45 kV (AC) are identified/listed in 2.3/SE.1.

NOTE All National Standards referred to in this Part 3-18 and listed in 2.3/SE.2 will be replaced by the relevant European Standards as soon as they become available and are declared by Swedish NC to be applicable and thus reported to the secretary of CLC/TC 11.

Clause National regulation

1 Scope

(ncpt) **SE.1 Application to existing overhead lines**

This Part 3-18 is applicable for new overhead lines only and not for existing lines in Sweden. If some planning/design or execution work on existing lines in Sweden has to be performed, the degree of application of this Standard shall be agreed upon by the parties concerned.

(ncpt) **SE.2 Replacement**

This Part 3-18 replaces the Swedish Standards SS 436 01 01 to SS 436 01 06 and SS 421 07 10 for overhead lines with a nominal voltage greater than 45 kV. Consequently this Part only take into account the former Class A and the reinforced lines “ledning Klass A respektive Brottsäker ledning”.

(ncpt) **SE.3 Optical ground wire (OPGW) and optical phase conductor (OPCON)**

This Part 3-18 is applicable for installation of OPGW and OPCON, also known as OPPC, in overhead lines in Sweden.

(ncpt) **SE.4 All dielectric self supporting optical cable (ADSS) and optical attached cable (OPAC)**

This Part 3-18 is applicable for installation of ADSS and OPAC in overhead lines in Sweden.

NOTE The allowable electrical field for the ADSS cable should be taken into consideration when the conductor configuration is determined.

2 Definitions, symbols and references

2.1 SE.1 Similar conductors

(ncpt) Similar conductors are conductors who have the same cross section, material, sag and attachment, see also 5.4.2/SE.3.

2.2 SE.1 List of symbols

(ncpt)

E_I	Modulus of elasticity, initial stage
E_{iL}	Modulus of elasticity, initial lower
E_{iU}	Modulus of elasticity, initial upper
E_p	Modulus of elasticity, final stage
K	Concrete cube strength
L	System length
S	Voltage dependent distance
U_m	Highest voltage for equipment
U_{SK}	Lightning impulse withstand voltage
U_{SL}	Switching impulse withstand voltage
U_V	Short duration wet power frequency withstand voltage
W	Free space, from high water level, for sailing given by the authorities
B	Nominal width of steel profile
c_u	Shear strength

Clause National regulation

f_{ctm}	Mean value of axial tensile strength of concrete
f_{yk}	Characteristic value of yield strength
g_e	Dead weight of the conductor
g_{i0}	Uniform ice-load at no wind
g_{iw}	Uniform ice-load at normal wind
g_{w0}	Normal wind load at bare conductor
g_{wi}	Normal wind-load at conductor covered by uniform ice load
I	Radius of gyration about the relevant axis
T	Thickness of steel profile
γ_n	Partial factor for safety class
γ_{Rd}	Partial factor for geotechnical formula
ε_c	Strain elongation due to creep
ε_s	Strain elongation due to stress
σ	Stress value
σ_0	Stress value in conductor at 0°C
σ_p	Highest stress value at which E_{iL} is valid
ϕ'	Angle of internal friction

2.3 SE.1 National normative laws, government regulations

(A-dev) ELSÄK-FS 1994:7,
Elsäkerhetsverkets föreskrifter om utförande och skötsel av elektriska starkströmsanläggningar
The Swedish National Electrical Safety Board - Regulations for design, maintenance and operation of electrical installations

(A-dev) SFS 1957:601,
Förordning rörande elektriska starkströmsanläggningar,
The Swedish Government - Ordinance concerning electrical installations

(A-dev) BFS 1998:39,
Boverkets konstruktionsregler, BKR
The Swedish National Board of building, housing and planning - Building and Design Regulations

(ncpt) **SE.2 National normative standards referred to in this NNA**

SS-EN 335-1
Träskydd – Definition av riskklasser avseende biologiska angrepp – Del 1: Allmänt.
Durability of wood and wood-based products – Definition of hazard classes of biological attack – Part 1: General

SS-EN 335-2
Träskydd – Definition av riskklasser avseende biologiska angrepp – Del 2: Massivt trä.
Durability of wood and wood-based products – Definition of hazard classes of biological attack – Part 2: Application to solid wood

Clause National regulation

SS-EN 335-3
Träskydd – Definition av riskklasser avseende biologiska angrepp – Del 3: Träbaserade skivor.
Durability of wood and wood-based products – Definition of hazard classes of biological attack – Part 3: Application to wood-based panels

SS-EN 351-1
Träskydd – Träskyddsbehandlat massivt trä – Del 1: Klassificering och upptagning av träskyddsmedel.
Durability of wood and wood-based products – Preservative-treated solid wood – Part 1: Classification of preservative penetration and retention

SS 3192
Oorganiska ytbeläggningar - Varmförzinkade utvändigt gängade ståldetaljer.
Metallic and other non-organic coatings - Hot dip zinc coated threaded components of steel

SS 3193
Metriska ISO-gängor - Varmförzinkning av utvändiga grovgängor - Gängtoleranser och gränsavmått.
ISO general purpose metric screw threads, Hot dip galvanising of external screw threads – Tolerances and limits of sizes

SS 3583
Oorganiska ytbeläggningar - Zinkbeläggningar påförda genom styckvis varmdoppning - Allmänna upplysningar och fordringar.
Inorganic coatings - General hot dip galvanising – Guiding principles and requirements

SS 11 23 18
Aluminium och stål - Lina till friledning - Kontinuerlig krypprovning
Aluminium and steel – Stranded conductors for overhead lines – non-interrupted creep testing

SS 424 05 21 Stödisolator av massiv typ för friledningar
Line post insulators

SS 424 08 06 Linor av hård förzinkad ståltråd för luftledningar - Fe140-linor
Hard zinc-coated steel wire strands for overhead lines – Fe140 wire strands

SS 424 08 11
Tråd av aluminiumlegering för linor för friledningar - AlMgSi-tråd
Aluminium alloy wire for stranded conductors for overhead line – AlMgSi wire

SS 424 08 12
Linor av aluminiumlegering för friledningar – AlMgSi-linor
Aluminium alloy stranded conductors for overhead line – AlMgSi-conductor

SS 424 08 13
Tråd av aluminiumlegering för linor för friledningar - Al 59-tråd
Aluminium alloy wire for stranded conductors for overhead line – Al 59 wire

Clause National regulation

SS 424 08 14
Linor av aluminiumlegering för friledningar - Al 59-linor
Aluminium alloy stranded conductors for overhead line – Al 59-conductor

SS 424 12 50
Najning
Ties

SS 424 12 51
Förformad najningsspiral
Preformed ties

SS-EN 10 025+A1
Varmvalsade formvaror av olegerat allmänt konstruktionsstål och maskinstål - Tekniska leveransbestämmelser
Hot rolled products of non-alloy structural steels - Technical delivery conditions

SS-EN 10 113
Varmvalsade produkter av svetsbara finkornsstål för allmänna konstruktionsändamål - Del 1-3
Hot-rolled products in weldable fine grain structural steels - Part 1-3

SS-EN 60060
Högspänningsprovning
High-voltage test techniques -
Part 1: General definitions and test requirements
Part 2: Test procedures
Part 3: Measuring devices
Part 4: Application guide for measuring devices

SS-IEC 888
Förzinkad ståltråd för linor för friledningar
Zinc-coated steel wires for stranded conductors

(ncpt) **SE.3 National informative documents referred to in this NNA**

[1] BBK - Boverkets handbok om betongkonstruktioner
The Swedish National Board of building, housing and planning - Handbook for concrete structures

[2] BSK - Boverkets handbok om stålkonstruktioner
The Swedish National Board of building, housing and planning - Handbook for steel structures

[3] Korrosionsinstitutet - Riktlinjer för användning av rostströga stål - Korrosionstekniska synpunkter
The Swedish Corrosion Institute - Guidelines for use of weathering steel - Corrosion technical aspects

[4] Korrosionsinstitutet - Rostströga stål i byggnader
The Swedish Corrosion Institute - Weathering steel in buildings

Clause National regulation

[5] NTR Dokument 3: 1998
Nordiska Träskyddsrådet – Nordiska regler för kvalitetskontroll och märkning av impregnerat trä – Del 1: Furu och andra lättimpregnerade barrträdslag
The Nordic Wood Preservation Council – Nordic rules for quality control and marking of impregnated wood – Part 1. Pine and other easy impregnated conifers

[6] NAD(S)/SS-ENV 1992-1-1
Nationellt anpassningsdokument till SS-ENV 1992-1-1, Betong konstruktioner - Dimensionering Eurocode 2 Del 1-1: Allmänna regler och regler för byggnader
National Application Document for SS-ENV 1992-1-1, Eurocode 2: Design of concrete structures - Part 1: General rules and rules for buildings

[7] NAD(S)/SS-ENV 1993-1-1
Nationellt anpassningsdokument till SS-ENV 1993-1-1, Stålkonstruktioner - Dimensionering, Eurocode 3 -Del 1-1: Allmänna regler och regler för byggnader
National Application Document for SS-ENV 1993-1-1, Eurocode 3: Design of steel structures - Part 1-1: General rules and rules for buildings

[8] NAD(S)/SS-ENV 1995-1-1
Nationellt anpassningsdokument till SS-ENV 1995-1-1, Träkonstruktioner - Dimensionering - Eurocode 5 -Del 1-1: Allmänna regler och regler för byggnader
National Application Document for SS-ENV 1995-1-1, Eurocode 5 - Design of timber structures - Part 1-1: General rules and rules for buildings

[9] NAD(S)/SS-ENV 1997-1
Nationellt anpassningsdokument till SS-ENV 1997-1, Geokonstruktioner - Dimensionering: Eurocode 7 - Del 1: Allmänna regler
National Application Document for SS-ENV 1997-1, Eurocode 7: Geotechnical design - Part 1: General rules

[10] NAD(S)/SS-EN 10 025+A1 and SS-EN 10 113
Nationellt anpassningsdokument till SS-EN 10 025+A1, Varmvalsade formvaror av olegerat allmänt konstruktionsstål och maskinstål – Tekniska leveransbestämmelser, och SS-EN 10 113 Varmvalsade produkter av svetsbara finkornstål
National Application Document for SS-EN 10 025+A1 and SS-EN 10 113 , Hot rolled products of non-alloy structural steels - Technical delivery conditions, and SS-EN 10 113, Hot-rolled products in weldable fine grain structural steels - Part 1: General delivery conditions

3 Basis of design

3.2.2 SE.1 Reliability level

(ncpt) Reliability level 2 with partial factors in accordance with 4.2.11 of this NNA shall be used for overhead lines in Sweden for which this NNA is applicable.

(ncpt) **SE.1.1 Class A**

Lines designed for the ice load in accordance with 4.2.3.2/SE.1-2 and 4.2.4.4/SE.1. Examples are reinforced lines and other lines which are intended to be a part of systems which are used for transmission and distribution over the entire country or which otherwise are of substantial importance.

Clause National regulation

(ncpt) **SE.2 Reinforced lines**

Reinforced line is demarcated by terminal supports.

The route and performance for reinforced lines shall be made in such a way that the risk of damage is prevented as far as possible. Reinforced line may thus not be routed over or in perilous vicinity of shooting ranges, chemical industries which emit gas that is harmful to line materials, or locations where combustible objects or inflammables exist to such an extent that a fire could be perilous for the line. Nor may a reinforced line be routed close to buildings or structures of such low structural strength that will not withstand occurring wind loads. It shall be guaranteed that falling trees will not damage the line.

3.7.2 SE.1

(ncpt) When calculating the effect of the action on the conductor tension, the partial factors γ_F shall be applied to the difference in actual conductor tension and tension at 0°C in bare conductor. The partial factors γ_F shall not be applied to wind and ice loads for calculation of the conductor tension.

4 Actions on lines

4.2.2.2 SE.1 Dynamic wind pressure

(snc) The characteristic wind pressure q_h depends on the height h and the gust wind speed. Height h is the vertical distance in metres from the ground or water surface to the centre of gravity of the wind exposed surface. For a transmission line, which crosses over a single height on a plain or flat country, *h* is the height to the centre of gravity over the plain.

Values given below are in general valid for Sweden. In mountainous regions and at exposed locations along the coast line a higher wind pressures may occur, which have to be considered.

(snc) **SE.1.1 For normal wind conditions the formula (1) and (2) are valid**

for $h \leq 25$ m $q_h = 500$ (N/m^2) (1)

for $h > 25$ m $q_h = 500 + 6 \cdot (h - 25)$ (N/m^2) (2)

(snc) **SE.1.2 For high wind conditions the formula (3) and (4) are valid**

for $h \leq 10$ m $q_h = 800$ (N/m^2) (3)

for $h > 10$ m $q_h = 800 + 6 \cdot (h - 10)$ (N/m^2) (4)

NOTE For determining electrical clearances only the formula (1) and (2) for normal wind conditions should be used.

4.2.2.4.1 SE.1 Wind force on conductors

(ncpt) The gust response factor $G_q = 1{,}0$

The structural resonance factor is:

for jumpers $G_C = 1{,}0$

for spans $G_C = 0{,}5$

4.2.2.4.2 SE.1 Wind force on insulators

(ncpt) For insulators the wind load per meter is:

$$Q_{Wins} = 0{,}16 \cdot q_h \quad \text{(N/m)} \qquad (5)$$

Clause National regulation

4.2.2.4.3 SE.1 For lattice support the drag coefficient is:
(ncpt)

rectangular cross section with flat sided members	$C_t = 3{,}95 - 5{,}79 \cdot \chi + 3{,}86 \cdot \chi^2$	(6)
rectangular cross section with cylindrical members	$C_t = 2{,}30 – 3{,}24 \cdot \chi + 2{,}94 \cdot \chi^2$	(7)
triangular cross section with flat sided members	$C_t = 3{,}40 – 4{,}71 \cdot \chi + 3{,}37 \cdot \chi^2$	(8)
triangular cross section with cylindrical members	$C_t = 1{,}95 – 2{,}68 \cdot \chi + 2{,}76 \cdot \chi^2$	(9)

where χ is the solidity ratio, see Figure 4.2.2.

(ncpt) **SE.2 For tower body and portal leg with triangular cross section the wind load is:**

$Q_{Wt} = q_h \cdot A_t \cdot C_t$ (N/m) (10)

4.2.2.4.4 SE.1 For timber poles the wind load per metre is:
(ncpt)

$Q_{Wpol} = 0{,}16 \cdot q_h$ (N/m) (11)

(ncpt) **SE.2 For other poles the characteristic value of the wind load is:**

$Q_{Wpol} = q_h \cdot A_{pol} \cdot C_{pol}$ (N) (12)

where

q_h = characteristic value of dynamic wind pressure (N/m^2). The wind is horizontal.

A_{pol} = area in vertical projection perpendicular to the wind direction (m^2)

C_{pol} = drag coefficient

For cylindrical poles the drag coefficient is depending on the diameter:

at diameter < 135 mm $C_{pol} = 1{,}2$

at diameter > 270 mm $C_{pol} = 0{,}6$

For diameters in between 135 and 270 mm, C_{pol} shall be linear interpolated.

For non cylindrical poles the drag coefficient is: $C_{pol} = 2{,}0$

Clause National regulation

4.2.3.2 SE.1 Uniform ice load
(snc)

For transmission lines in regions where greater uniform ice load is expected, higher values than those given below have to be considered.

(snc) SE.1.1 Ice load at normal wind conditions

Ice load at normal wind conditions $I = 9{,}2 + 0{,}51d$ (N/m)

where

d = bare conductor diameter (mm).

Ice load I shall be used in the load cases of normal wind referred to in 4.2.10.2/SE.1-5.

(snc) SE.1.2 Ice load at no wind

$$I_K = \sqrt{(I + g_e \cdot 9.81)^2 + g_{wi}^2} - g_e \cdot 9{,}81 \quad \text{(N/m)}$$

where

I = uniform ice load at normal wind, N/m

g_e = dead weight of the conductor, kg/m

g_{wi} = normal wind load at conductor covered by uniform ice load, N/m

I_K = uniform ice load at no wind, minimum 20 N/m

Ice load I_K shall be used in the load cases at still air referred to in 4.2.10.2/SE.1-4.

(snc) SE.2 Non uniform ice load

Non-uniform ice load is supposed to appear in any single span while the adjacent spans have no ice. Still air can be assumed during non-uniform ice load.

Non-uniform ice load is expected to be 10 Newton per metre conductor in Sweden in general. For transmission lines in regions where greater non-uniform ice load is expected, higher values have to be considered.

Higher non-uniform ice loads than 10 Newton per metre conductor can be expected within the following regions:

a) Within a zone of some tenths of km width, in open terrain towards the sea along the coast of northern Sweden. In such terrain transmission lines shall be designed for a non-uniform ice load of minimum 20 Newton per metre conductor.

b) In upland terrain in the interior of northern Sweden, approximately 400 m above sea level or upwards. In such terrain transmission lines shall be designed for a non-uniform ice load of minimum 30 Newton per metre conductor.

c) Bare mountain regions at altitude above forest. In such terrain the non-uniform ice load can considerably exceed the values given under a) and b). Due to lack of experience no values can be pre-set and such value shall be determined for each individual case.

Clause National regulation

4.2.3.3 SE.1 Ice forces on conductors
(ncpt)

The vertical force (Q_I) on a support due to ice load on conductors is calculated according to the formula:

$$Q_I = I \cdot a_v \qquad \text{(N)}$$

where

I is the ice load per unit length of the conductor.

a_v is the weight span.

The weight span is defined as the horizontal distance between the lowest points of a conductor on either side of a support. In steeply sloping terrain, the lowest points of the catenary curves of both adjacent spans can be on the same side of the support

4.2.4.2 SE.1 The ice density is: ρ_I = 917,4 kg/m^3
(snc)

(snc) **SE.2** The drag factor for ice covered conductors is: C_{cI} = 1,0

4.2.4.3 SE.1 The wind at ice condition is the normal wind conditions given in 4.2.2.2/SE.1.1
(snc)

4.2.4.4 SE.1 Ice thickness at normal wind condition
(snc)

Ice thickness at normal wind condition 18 (mm)

For determining the wind surface for ice coated conductors the diameter increased by twice the ice thickness shall be used for the surface calculation.

4.2.5 SE.1 Temperature effects
(snc) The design temperature in all load-cases given in 4.2.10.2/SE.1-4 shall be 0°C. Temperatures for calculation of clearances, see 5.4.2.2/SE.2.

4.2.6 SE.1
(ncpt) All supports shall have the strength and be assembled in such a way that no permanent damages occurs during the construction and maintenance period.

4.2.7 SE.1 Security loads

(ncpt) **SE.1.1 Basic assumption**

For a fixed attached conductor or shield wire, i.e. tension insulator set, pin or line post insulator, or shield wire attachment, a reduction factor ( ) equal to 0,4 shall be applied to the conductor tension on one side of the support, at ice, conductor temperature 0°C, in still air and before ice load and conductor creep. For a not fixed attached conductor, i.e. suspension insulator set, a reduction factor ( ) equal to 0,7 shall be applied to the conductor tension on one side of the support. The reduction of the conductor tension is assumed to occur in one conductor only, regardless of the number of circuits per support or the number of conductors per phase. The reduction of conductor tension shall be considered for the conductor at the most unfavourable position for each structural part. No contributing support from the other conductors shall be considered. The weight span shall not be reduced.

Clause National regulation

(ncpt) **SE.1.2 Alternative assumption**

100% conductor tension reduction for the conductor or shield wire, located at the most unfavourable position, at no ice, conductor temperature 0°C, in still air and before ice load and conductor creep. When calculating the residual static load it may be assumed, except in crossings, that the adjacent spans are equal to the ruling span of the transmission line. Relaxation of load resulting from any swing of the insulator assemblies, deflection or rotation of the support and the interaction with other conductors may be made. For bundle conductors, the reduction will affect all sub conductors in the bundle. The calculation of the residual static load shall be performed in the serviceability limit state. The weight span shall not be reduced.

4.2.10.2 SE.1

(ncpt) Supports and parts of supports shall be designed in accordance with load cases as follows. Ice loads on supports can in general be neglected. Supports which are intended to be used for more than one circuit shall be designed for that number of circuits which results in the most severe stress in each structural part. In load cases with reduction of conductor tension, the reduction of phase conductors and overhead earth wires shall be considered, but not simultaneously.
The design temperature for the following load cases shall be in accordance with 4.2.5 /SE.1.

The tension load in the conductors for the following load cases shall be calculated in accordance with 9.2.4 /SE.1.

(ncpt) **SE.2 Tangent and angle supports**

(ncpt) **SE.2.1 Load case 1 High wind**

This load case shall be used for all supports except natural grown timber poles.

- Dead weight
- High wind load on the conductors and on the support with accessories in accordance with 4.2.2.2/SE.1.2.

(ncpt) **SE.2.2 Load case 2a Uniform ice loads on all spans**

- Dead weight
- Uniform ice load at no wind on the conductors in accordance with 4.2.3.2/SE.1.2.
- An additional vertical load Q_k of 1 000 N, equivalent to the weight of a linesman with tools, acting in the most unfavourable point. The load is not required for pin insulator hooks and structural parts, which can not be affected by a linesman.

(ncpt) **SE.2.3 Load case 2b Uniform ice loads, transversal bending**

This load case can normally be ignored in Sweden.

(ncpt) **SE.2.4 Load case 2c - 2d Unbalanced ice loads**

These load cases can normally be ignored in Sweden.

(ncpt) **SE.2.5 Load case 3 Combined wind and ice load**

- Dead weight
- Uniform ice load at normal wind on the conductors in accordance with 4.2.3.2/SE.1.1.

Clause National regulation

- Normal wind load on the conductors and on the support with accessories in accordance with 4.2.2.2/SE.1.1.

ncpt) **SE.2.6 Load case 4 Construction and maintenance loads**
4.2.6 to be fulfilled.

(ncpt) **SE.2.7 Load case 5a Security loads, torsional loads**
Exception:

Natural grown timber poles with accessories do not have to be designed for this load case.

Suspension insulator sets and line-post insulators do not have to be designed for this load case.

(ncpt) **SE.2.7.1 Basic assumption**

- Dead weight
- Uniform ice load at no wind on the conductors in accordance with 4.2.3.2/SE.1.2.
- Reduction of the conductor tension on one side of the support in one conductor in accordance with 4.2.7/SE.1.1, Basic assumption.

In this load case crossarms and insulator attachments may be permanently deformed. The clearances shall be maintained to keep the transmission line in provisional service.

(ncpt) **SE.2.7.2 Alternative assumption**

- Dead weight
- Reduction of the conductor tension on one side of the support in one conductor (one bundle) in accordance with 4.2.7/SE.1.2, Alternative assumption

(ncpt) **SE.2.8 Load case 5b Security loads, longitudinal loads**
This load case can normally be ignored in Sweden.

(ncpt) **SE.3 Terminal support**

(ncpt) **SE.3.1 Load case 1 High wind**
This load case shall be used for all supports except natural grown timber poles.

- Dead weight
- High wind load on the conductors and on the support with accessories in accordance with 4.2.2.2/SE.1.2.
- Conductor tensions from all conductors or conductor tensions from the conductors on one side of the support, whichever resulting in the most severe stress.

(ncpt) **SE.3.2 Load case 2a Uniform ice loads on all spans**

- Dead weight
- Uniform ice load at no wind on the conductors in accordance with 4.2.3.2/SE.1.2.

Clause National regulation

- Conductor tension from all conductors on one side of the support. Terminal support that demarcates reinforced transmission line shall, in this load case, be designed for the one-sided conductor tensions from all the conductors in the reinforced transmission line. Terminal support that terminates a transmission line at a substation shall be designed for the one-sided conductor tensions from all conductors in the terminated transmission line. It is also recommended to design the terminal support for the one-sided conductor tensions from the conductors between the terminal support and the substation.
- An additional vertical load *Qk* of 1 000 N, equivalent to the weight of a linesman with tools, acting in the most unfavourable point. The load is not required for pin insulator hooks and structural parts that can not be affected by a linesman.

(ncpt) **SE.3.3 Load case 2b Uniform ice loads, transversal bending**

This load case can normally be ignored in Sweden.

(ncpt) **SE.3.4 Load case 2c - 2d Unbalanced ice loads**

These load cases can normally be ignored in Sweden.

(ncpt) **SE.3.5 Load case 3 Combined wind and ice load**

- Dead weight
- Uniform ice load at normal wind on the conductors in accordance with 4.2.3.2/SE.1.1.
- Normal wind load on the conductors and on the support with accessories in accordance with 4.2.2.2/SE.1.1.
- Conductor tensions from all conductors or conductor tensions from the conductors on one side of the support, whichever resulting in the most severe stress.

(ncpt) **SE.3.6 Load case 4 Construction and maintenance loads**

4.2.6 to be fulfilled.

(ncpt) **SE.3.7 Load case 5a Security loads, torsional loads**

- Dead weight
- Uniform ice load at no wind on the conductors in accordance with 4.2.3.2/SE.1.2.
- Conductor tension from all conductors, however for some conductors the tension shall be reduced as follows:
- Reduction of the conductor tension shall be the number and combinations of conductors which results in the most unfavourable case. Reduction in conductor tension in accordance with 4.2.7/SE.1.1, Basic assumption.

(ncpt) **SE.3.8 Load case 5b Security loads, longitudinal loads**

This load case can normally be ignored in Sweden.

(ncpt) **SE.4 Conductors**

Conductors shall be tensioned in such an arrangement that the tension stress σ_0 in the bare conductor at 0°C and no wind will be equal in all spans between two termination points. The tension stress σ_0 shall be selected in the way that the stress in the conductor, at uniform ice load and no wind at 0°C in accordance with 4.2.3.2/SE.1.2, does not exceed the stress in accordance with 9.2.4/SE.1.

Clause National regulation

In addition, the tension at 0°C and no wind or ice shall be selected with respect to the danger of fatigue breakage in the conductor due to conductor vibrations. No general rules for the conductor tensioning can be given as the risk of dangerous vibration is not only depending on the conductor tension, but also on the character of the terrain, the wind, the performance of the conductor attachments, span length, the vibration damper system.

4.2.11 SE.1 Partial factors for actions

(ncpt) The loads which are referred to in the load cases are characteristic load values and shall be multiplied with the partial factors $_G$ and $_Q$. Each load case is divided in the four load combinations in accordance with Table 4.2.1/SE.1 For all load cases and load combinations the basic design equation is:

$$E_d = \Sigma\, \gamma_G\, G_K + \psi\, \Sigma\, \gamma_Q\, Q_{nK} \qquad \text{(N/m)}$$

The reduction factor ψ is 1,0.

Table 4.2.1/SE.1 - Partial factors for actions

Action	**Partial factors Symbol**	**Load combination**			
		1	**2**	**3**	**4**
Permanent actions:					
Dead weight of supports, foundations and conductors	γ_G	1,0	0,85	1,15	1,0
Dead weight of soil and ground water	γ_G	1,0	1,0	1,0	1,0
Conductor tension for bare conductors at 0°C	γ_G	1,0	1,0	1,15	1,0
Variable actions: Wind and ice loads. Additional load. Residual static load at one-sided conductor tension reduction, alternative assumption. Difference in actual conductor tension and tension at 0°C on bare conductor.	γ_Q	1,3	1,3	0	1,0
Maintenance and construction loads: e.g. Dead weight	γ_G	1,65	1,65	0	1,3

NOTES Load combinations 1, 2 and 3 are ultimate limit states.

Load combination 4 is serviceability limit state.

Load combination 1 is determinant normally.

Load combination 2 might be determinant for foundations.

Load combination 3 is determinant only when the variable actions are small compared to the permanent actions.

Load combination 4 is valid when checking deformations, electrical clearances and concrete cracks.

Clause National regulation

SE.2 Partial factors for actions at guy failure

(ncpt) Partial factors shall be taken from Table 4.2.2/SE.2 with reference to 5.4.3/SE.7. The most unfavourable load combination shall be used.

Table 4.2.2/SE.2 - Partial factors for actions at guy failure

Action	Partial factors Symbol	Load combination	
		1[1)]	2[2)]
Permanent actions:			
Dead weight of supports, foundations and conductors	γ_G	1,0	0,85
Dead weight of soil and ground water	γ_G	1,0	1,0
Conductor tension for bare conductors at +15°C[3)]	γ_G	1,0	1,0
Variable actions: Wind load. Difference at +15°C between conductor tension at normal wind and no wind[3)].	γ_Q	1,3	1,3

1) Load combination 1 is normally determinant for supports and guys.
2) Load combination 2 is determinant for foundations.
3) At final stadium after the conductor has been subject to ice load and after conductor creep.

5 Electrical requirements

5.3 SE.1 Insulation co-ordination, Insulation levels

(ncpt) Standardised insulation levels for lines ready for operation shall be in accordance with Table 5.3/SE.1.1 and Table 5.3/SE.1.2.
The insulation of the line shall withstand the given voltages without breakdown of the insulation under the conditions from voltage testing in accordance with SS-EN 60060.

Table 5.3/SE.1.1 - Systems with isolated neutral or systems with resonant earthing - Standardised insulation levels for $U_m \leq 72,5$ kV.

Highest voltage for equipment U_m kV	Lightning impulse withstand voltage U_{SK} kV (peak)	Short duration power frequency withstand voltage U_v kV (wet r.m.s)
52	250	95[1)]
72,5	325[2)]	140[2)]

1) May be used under certain conditions for highest operating voltage ≤ 55 kV.
2) This level is recommended for systems with highest operating voltage 84 kV.

Clause National regulation

Table 5.3/SE.1.2 - Systems with low impedance neutral earthing Standardised insulation levels for 145 ≤ U_m ≤ 420 kV

Highest voltage for equipment U_m kV	Lightning impulse withstand voltage U_{SK} kV (peak)	Switching impulse withstand voltage U_{SL} kV (peak)	Short duration power frequency withstand voltage U_v kV (wet r.m.s)
145	550	350	230
170	650	425	275
245	850	650	360
420	1 175	950	-

The required insulating resistance can be achieved by insulators, wooden distance and/or air-gaps. Required rated short duration power frequency withstand voltage and rated switching impulse withstand voltage shall be obtained by the phase insulators only. At lightning impulse withstand voltage the required voltage may be achieved by a combination of phase insulator, stay insulator and wooden distance.

The values given in Table 5.3/SE.1.1 and Table 5.3/SE.1.2 are phase-to-earth voltages. The impulse withstand voltage between two phases in a line shall be at least 115% of the impulse withstand phase-to-earth voltage, with regard to the extra stress of the insulation between two phases if the operating voltage in one phase is in opposite to the over-voltage in the other phase.

For a line where the support material gives a significant contribution to the phase-to-earth impulse withstand voltage usually the impulse withstand voltage between two phases is less than 115% of the phase-to-earth withstand voltage. In such cases the impulse withstand voltage between two phases shall determine the insulating resistance of the line.

(ncpt) **SE.2 Calculation of withstand voltages for insulator sets**

For insulator sets consisting of ordinary cap and pin insulators the insulating resistance shall be calculated in accordance with the following formulas:

(ncpt) **SE.2.1 Insulator set without arc protection devices**

$U_v = 0{,}28\ (L_1 - 50)$ $(150 < L_1 < 785)$

$U_v = 0{,}22\ (L_1 - 150)$ $(785 < L_1 < 2\ 500)$

$U_{SK} = 0{,}52\ (L_1 + 40)$ $(150 < L_1 < 2\ 500)$

$U_{SL} = 0{,}46\ L_1$ $(150 < L_1 < 2\ 500)$ when $U_m > 145$ kV

(ncpt) **SE.2.2 Insulator set with arc protection devices**

$U_v = 0{,}31\ L_1$ $(150 < L_1 < 625)$

$U_v = 0{,}25\ (L_1 + 150)$ $(625 < L_1 < 2\ 500)$

$U_{SK} = 0{,}52\ (L_1 + 40)$ $(150 < L_1 < 2\ 500)$

$U_{SL} = 0{,}46\ L_1$ $(1\ 000 < L_1 < 2\ 500)$ when $U_m > 145$ kV

Clause National regulation

where

U_v = Short duration power frequency withstand voltage, wet (kV)

U_{SK} = Lightning impulse withstand voltage 1,2/50 µs (kV)

U_{SL} = Switching impulse withstand voltage 200/2 500 µs (kV)

L_1 = Arcing distance of the insulator set (mm)

(ncpt) **SE.3 Withstand voltage for a wood distance**

Supports and crossarms of wood may be a part of the insulation of the line with regard to lightning impulse voltage. The insulating resistance is assumed to be at least 0,1 kV/mm wood distance. This value is valid for both impregnated and not impregnated wood.

(ncpt) **SE.4 Calculation of withstand voltage for air gaps**

$U_v = 0{,}33\ L_2$ ($L_2 > 100$)

$U_{SK} = 0{,}47\ L_2 + 20$ ($L_2 > 100$)

$U_{SL} = 0{,}41\ L_2$ ($1\ 000 < L_2 < 2\ 500$) $U_m > 145$ kV

where

U_v = Short duration power frequency withstand voltage, wet (kV)

U_{SK} = Lightning impulse withstand voltage 1,2/50 µs (kV)

U_{SL} = Switching impulse withstand voltage 200/2 500 µs (kV)

L_2 = Arcing distance of the air-gap (mm)

(ncpt) **SE.5 Line with timber pole and metallic crossarm without earth connection**

For lines or sections of lines in systems with low impedance neutral earthing and with metallic crossarms without earth connections the probability to get a phase-to-phase short-circuit in connection to lightning faults is very high when:

- the insulation distance between crossarm and earth along pole and/or stay insulator is longer than $3{,}2 \cdot L_1$ and
- at Load Case 8a and 8b (see 5.4.2.2/SE.1.5-1.6.) the flashover distance in air to the nearest part of stay insulator or timber pole exceeds $1{,}1 \cdot L_1$ and
- at Load Case 8a and 8b the flashover distance in air to earth connected part of the guy exceeds $1{,}8 \cdot L_1$

where

L_1 = Arcing distance of the air-gap (mm)

The stay insulator shall be of the composite type with glass fibre reinforced plastic core.

Clause National regulation

5.3.3.2 SE.1 Power frequency voltage, Creepage distance of insulator set

(ncpt) Table 5.3.3.2/SE.1.1 gives the creepage distance for vertically positioned phase insulator sets at different contamination levels. When no contamination is expected normal standardised insulators will give sufficient service reliability. The figures in the Table 5.3.3.2/SE.1 are valid for all operation voltage levels and types of system earthing.
For V-sets consisting of string insulator units the figures in Table 5.3.3.2/SE.1 may be decreased with 10-20%. For a horizontally positioned insulator set the washing effect from rain is of great importance. If a good, natural washing effect not can be expected the creepage distance shall be in accordance with Table 5.3.3.2/SE.1.

When very long creepage distance is required the length of the insulator string in certain cases will be larger than normal. In these cases special arcing horns or electrodes shall be installed in order to reduce the lightning impulse withstand voltage on a section in the vicinity of a substation. The overhead line shall on such section have an insulation level as is lower than that of the substation.

Table 5.3.3.2/SE.1 - Creepage distance in contamination areas

Pollution level	Examples of typical environments	Creepage distance in mm/kV for highest voltage for equipment
Light	Line within 1 km from area with polluting industries Line protected by forests within 10-20 km from the west coast (Norwegian boarder-Falsterbo) Line within ~10 km from the south coast (Falsterbo-the north of the island of Öland)	20
Heavy	Line in area with polluting industries Line in open agricultural areas within 40 km from the west coast Line in other kinds of terrain within 10 km from the west coast	25
Very heavy	Line within 0,5 km from area with very severe polluting industries and line within such area Line of considerable importance within some kilometre from the west coast	31

(ncpt) **SE.2 Insulators in interphase insulation**

For insulators between phases the lightning impulse withstand voltage shall be at least 1,15 times the phase-to-earth withstand voltage.

The power frequency withstand voltage shall be at least 1,75 times the phase-to-earth withstand voltage and the creepage distance shall be at least 1,75 times the creepage distance chosen for phase-to-earth insulation under the same environmental conditions.

Clause National regulation

5.3.3.3 SE.1 Slow front over-voltages, Combined insulation

(ncpt) The slow front withstand voltage is only considered when the highest voltage for equipment exceeds 145 kV. The insulation withstand shall be maintained with the insulation by the phase insulator only. Contributions from wood distances or stay insulators shall not be regarded for the phase-to-earth insulation.

5.3.3.4 SE.1 Fast front over-voltages, Combined insulation

(ncpt) The impulse withstand voltage for insulation combined of different types of insulation material (porcelain/glass, wood and air) is lower than the sum of the different lengths of insulation.
When the phase-to-earth insulation consists of an insulator combined with a wood distance the additional withstand voltage for the wooden part shall be 0,1 kV/mm length of wood.

When the phase-to-earth insulation consists of a phase insulator combined with a stay insulator the additional withstand voltage for the stay insulator shall be as follows:

- Cap and pin insulator 40 kV
- Composite insulator 0,3 kV/mm length

When the insulating resistance is determined by the phase-to-phase insulation the equivalent impulse withstand voltage phase-to-earth is derived from the phase-to-phase withstand voltage divided by the factor 1,15.

The phase-to-phase withstand voltage shall be as follows:

- Line with Line-post insulators $1{,}6 \cdot U_{SK}$ (kV)
- Line with cap and pin insulators $1{,}4 \cdot U_{SK}$ (kV)

where

U_{SK} = Lightning impulse withstand voltage

5.4.2.2 SE.1 Load cases for calculation of clearances

(ncpt) The clearances within a support shall be obtained for the following combinations of winds, ice loads and temperatures. Winds and ice loads together with minimum temperature shall be in accordance with 5.4.2.2/SE.2.1 and 5.4.2.2/SE.2.3.
For lines with a highest voltage for equipment up to and including 145 kV the Load Cases 6, 7 and 8 shall be applied.

Load case 8 refers to conditions during thunderstorms. In Load Cases 5 to 10 the clearances shall meet the requirements regardless of the wind direction.

(ncpt)

SE.1.1 Load case 5a

- Dead weight
- Uniform ice load at normal wind on the conductor, see 4.2.3.2/SE.1.1
- Normal wind on the conductor, see 4.2.2.2/SE.1.1
- Temperature 0°C
- Initial stage before conductor creep, see 9.2.4/SE.1

Clause National regulation

(ncpt) **SE.1.2 Load case 5b**

- Dead weight
- Uniform ice load at normal wind on the conductor, see 4.2.3.2/SE.1.1
- Normal wind on the conductor, see 4.2.2.2/SE.1.1
- Temperature 0°C
- Final stage after conductor creep, see 9.2.4/SE.1

(ncpt) **SE.1.3 Load case 6**

- Dead weight
- Bare conductor
- Normal wind on the conductor, see 4.2.2.2/SE.1.1
- Temperature +15 °C
- Final stage after conductor creep, see 9.2.4/SE.1

(ncpt) **SE.1.4 Load case 7**

- Dead weight
- Bare conductor
- Normal wind on the conductor, see 4.2.2.2/SE.1.1
- Minimum temperature at wind, see 5.4.2.2/SE.2
- Initial stage before conductor creep, see 9.2.4/SE.1

(ncpt) **SE.1.5 Load case 8a**

- Dead weight
- Bare conductor
- 30% of normal wind on the conductor, see 4.2.2.2/SE.1
- Temperature +15 °C
- Initial stage before conductor creep, see 9.2.4/SE.1

(ncpt) **SE.1.6 Load case 8b**

- Dead weight
- Bare conductor
- 30% of normal wind on the conductor, see 4.2.2.2/SE.1
- Temperature +15 °C
- Final stage after conductor creep, see 9.2.4/SE.1

(ncpt) **SE.1.7 Load case 9**

- Dead weight
- Bare conductors
- No wind
- Temperature +15 °C
- Final stage after conductor creep, see 9.2.4/SE.1

Clause National regulation

(ncpt) **SE.1.8 Load case 10**

- Dead weight
- Bare conductor
- No wind
- Minimum temperature, see 5.4.2.2/SE.2, Design temperatures
- Initial stage before conductor creep, see 9.2.4/SE.1

(snc) **SE.2 Design temperatures**

For the calculation of the clearances the following temperatures shall be used:

(snc) **SE.2.1 Minimum temperature**

a) depending on geographical location from -50°C up to -25°C in still air, see Figure 5.4.2.2/SE.2.1.

b) at wind conditions 20°C higher than in *a)*.

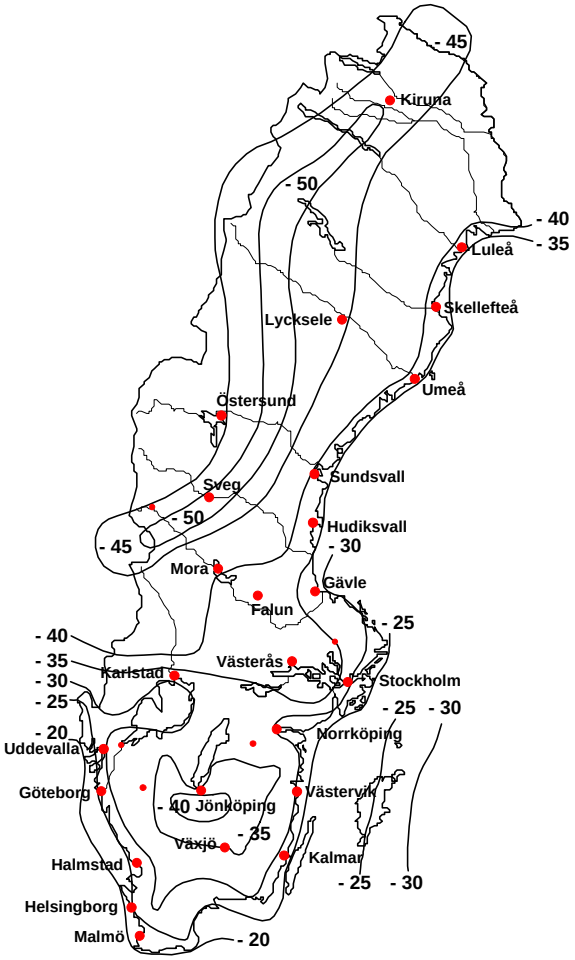

Figure 5.4.2.2/SE.2.1 - Map over Sweden with isobars for minimum temperature

Clause National regulation

(snc) **SE.2.2 Maximum temperature in conductor**

a) at no wind, minimum +50°C

NOTE It is assumed that the conductor will be heated to +35°C by the sun radiation and the heat in the air. The electrical current will increase the temperature with not more than +15°C. The air temperature and the sun radiation is lower during the wintertime and hence the temperature rise from the current can be higher than +15°C, but the temperature in the conductor shall not exceed the maximum temperature in conductor.

b) at wind +15°C

(snc) **SE.2.3 Temperature at ice load**

Temperature at ice load at no wind and at wind 0°C.

5.4.3 SE.1 Clearances within the span

(ncpt) In order to prevent clashing and flashover between conductors the conductors shall be attached to the support at a proper distance from each other. Air-clearance phase-to-phase and phase-to-earth between conductors in one overhead line as well as the clearance between closest conductors in two parallel overhead lines shall be in accordance with this amendment of the standard.
The given formulas shall be used for normal conditions. Special investigation shall be made for conductors with low tension, where galloping may occur or where the conductor configuration is different in the two supports, which demarcate the span.

(ncpt) **SE.2 Attachment point for conductor**

- top of the insulator for pin or post insulator
- attachment point in the support for suspension or tension insulator set
- attachment point of the yoke plate or suspension clamp in the apex of the V-string insulator set

The following formulas shall be used for conductors attached by tension insulator sets or by pin or post insulators in both ends of the span. The formulas shall also be used for spans between tangent supports with suspension insulator sets within some limitations, see notes below the formulas.

For angle supports with suspension insulator sets it may be necessary to consider the swing-out angle of the insulator sets at calculation of the clearance. The swing-out angle is dependent of the line angle deviation and of the relationship a_h/a_v.

where

a_h = wind span

a_v = weight span

(ncpt) **SE.3 Lines with similar conductors**

Similar conductors are conductors which have the same cross section, material, sag and attachment (e.g. tension insulator sets, pin or post insulators, suspension insulator sets with equal length).

Clause National regulation

(ncpt) **SE.3.1 Horizontal configuration of conductors**

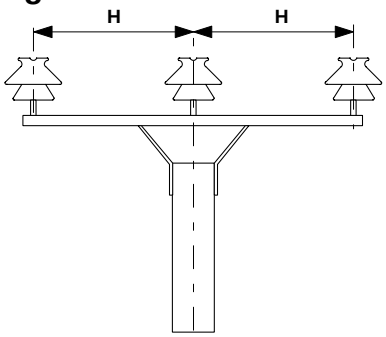

Figure 5.4.3/SE.3.1 - Horizontal configuration

The horizontal clearance between conductors in mid-span shall be calculated in accordance with the formula:

$$H = 0{,}45\sqrt{b + L} + k \cdot U_m \qquad \text{(m)}$$

where

b = sag of the conductor, at uniform ice load at no wind and at final stage after conductor creep, (m)

L = length of suspension insulator set including any extension link, (m) (*L* = 0 for tension insulator set, V-string insulator set and linepost insulator)

k = coefficient which is 0,007 for phase-to-phase calculation and 0,006 for phase-to-earthwire calculation

U_m = highest voltage for equipment, (kV)

The formula is only valid for suspension sets if the relationship a_h/a_v for both conductors are equal in each of the demarcating supports.

(ncpt) **SE.3.2 Vertical configuration of conductors**

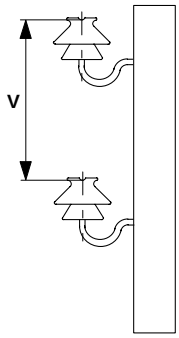

Figure 5.4.3/SE.3.2 - Vertical configuration

Clause National regulation

The vertical clearance in mid-span shall be calculated in accordance with the formula:

$$V = k_v \cdot (b_1 - b_2) + L_1 - L_2 + k \cdot U_m \qquad \text{(m)}$$

where

b_1 = sag of the upper conductor, uniform ice load at no wind and at initial stage before conductor creep, (m)

b_2 = sag of the lower conductor, bare conductor at 0 °C and at initial stage before conductor creep, (m)

L = length of suspension insulator set including any extension link, (m) (L = 0 for tension insulator set and linepost insulator)

k = coefficient which is 0,007 for phase-to-phase calculation and 0,006 for phase-to-earthwire calculation

U_m = highest voltage for equipment, (kV)

k_v = coefficient given in Table 5.4.3/SE.3.2

Table 5.4.3/SE.3.2 - Coefficient k_v

Type of conductor	Coefficient k_v	
	Tension set and pin or post insulator	Suspension set and V-set
ACSR, AAC or AAAC	1,0	1,1
Copper and steel	1,2	1,3

(ncpt) **SE.3.3 Mixed configuration - conductors in separated planes**

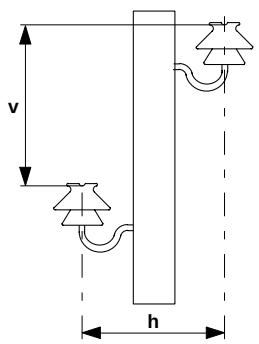

Figure 5.4.3/SE.3.3 - Mixed configuration

h and v shall be calculated in accordance with the formulas:

$$h = H\sqrt{1 - \frac{v}{V}} \qquad \text{(m)}$$

$$v = V\left(1 - \frac{h^2}{H^2}\right) \qquad \text{(m)}$$

Clause National regulation

(ncpt) **SE.4 Lines with dissimilar conductors**

(ncpt) **SE.4.1 Horizontal placements of conductors**

Horizontal clearance, between conductors, in the mid-span shall be calculated in accordance with the formula:

$$H = (b_1 + L_1)\,sin\,\alpha_1 - (b_2 + L_2)\,sin\,\alpha_2 + k \cdot U_m \qquad \text{(m)}$$

where

α = swing-out angel of the conductor, (°)

b = sag of the conductor, at uniform ice load at no wind and at initial stage before or at final stage after conductor creep whichever is the most unfavourable, (m)

L = length of suspension insulator set including any extension link, (m) (*L* = 0 for tension insulator set, V-string insulator set and linepost insulator)

k = coefficient which is 0,007 for phase-to-phase calculation and 0,006 for phase-to-earthwire calculation

U_m = highest voltage for equipment, (kV)

Indices

1 = conductor 1 as is the conductor which is first hit and by 100% of the normal wind

2 = conductor 2 as is the conductor which is last hit and by 70% of the normal wind

H shall be calculated for both wind directions.

The swing-out angle for conductor 1 shall be calculated in accordance with the formula:

$$\alpha_1 = \text{arctg}\frac{g_{wi}}{g_e \cdot 9{,}81 + g_{iw}}$$

The swing-out angle for conductor 2 shall be calculated in accordance with the formula:

$$\alpha_2 = \text{arctg}\frac{0{,}7 \cdot g_{wi}}{g_e \cdot 9{,}81 + g_{iw}}$$

where

g_{i0} = uniform ice load at no wind, minimum 20 N/m

g_e = dead weight of the conductor, kg/m

g_{iw} = uniform ice load at normal wind, N/m

g_{wi} = normal wind load at conductor covered by uniform ice load, N/m

The formula is only valid for suspension sets if the relationship a_h/a_v for both conductors are equal in each of the demarcating supports.

Clause National regulation

(ncpt) **SE.4.2 Vertical placements of conductors**

The clearance between conductors shall be calculated in accordance with the previous formula for calculation of vertical clearance *V*.

The sag b_1 and b_2 shall be at initial stage before or at final stage after conductor creep whichever is the most unfavourable.

For coefficient k_v the highest value of the two conductors is chosen. (see Table 5.4.3/SE.3.2).

(ncpt) **SE.4.3 Mixed placement - conductors in separated planes**

A method for calculation of the clearance between conductors when they are placed in separated horizontal and vertical planes are given below.

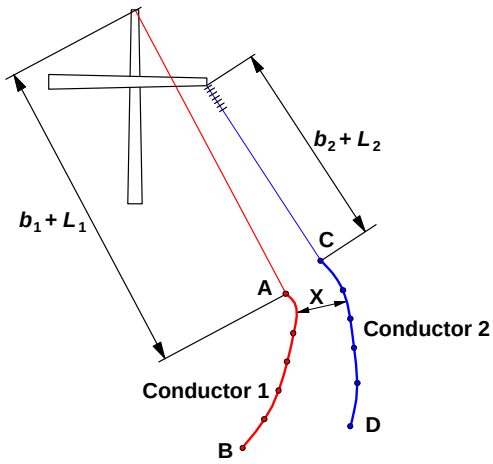

Figure 5.4.3/SE.4.3.1 Mixed configuration, Case 1

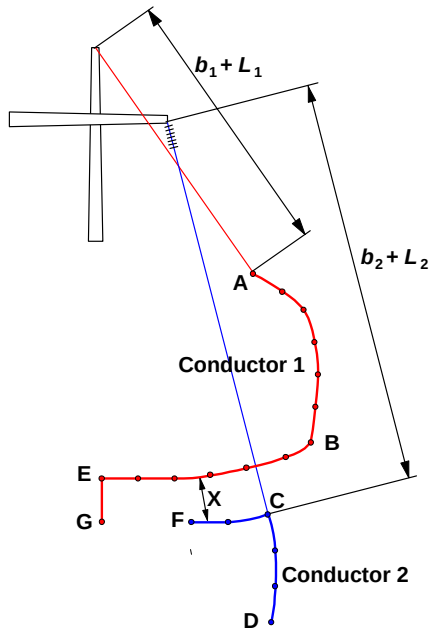

Figure 5.4.3/SE.4.3.2 Mixed configuration, Case 2

This method determine the shortest distance *X* between two curves *A-B* and *C-D* in Figure 5.4.3/SE.4.3.1 (Case 1) or *B-E-G* and *C-F* in Figure 5.4.3/SE.4.3.2 (Case 2). The curves describe the sag and swing-out of the conductors under influence from dead weight and increasing ice- and wind loads.

a) Case 1

- Conductor 1 - dead weight and with uniform ice load increasing from zero at point *A* to 100% (g_{iw}) at point *B* and wind load g_{w0} at point *A* to g_{wi} at point *B*.

- Conductor 2 - dead weight and with uniform ice load increasing from zero at point *C* to 100% (g_{iw}) at point *D* and wind load $0{,}7 \cdot g_{w0}$ at point *C* to $0{,}7 \cdot g_{wi}$ at point *D*.

Clause National regulation

b) Case 2

- Conductor 1 - dead weight and with 100% uniform ice load (g_{iw}) at point *E* and normal wind load increasing from zero at point *E* to g_{wi} at point *B*. For no wind condition the uniform ice load is increasing from g_{iw} at point *E* to g_{i0} at point *G*. The curve *A-B* is calculated in accordance with Case 1 above.

- Conductor 2 - dead weight and with normal wind load increasing from zero at point *F* to 0,7 · g_{w0} at point *C*. The curve *C-D* is calculated in accordance with Case 1 above.

NOTE Case 2 has to be checked when conductor 1 has a greater swing-out than conductor 2. That means when a vertical line through point *C* is between the attachment point of conductor 1 and point *B*.

where

g_{i0} = uniform ice load at no wind, (N/m)

g_{iw} = uniform ice load at normal wind, (N/m)

g_{w0} = normal wind load at bare conductor, (N/m)

g_{wi} = normal wind load at conductor covered by uniform ice load, N/m

b = sag of the conductor, (m)

L = length of suspension insulator set, (m)

X = shall be at least 0,006 · U_m between phase and earthwire and 0,007 · U_m between phases (m)

U_m = highest voltage for equipment, kV

The calculation has to be made for the most unfavourable condition of sag before or after creep of the conductors. For equal conductors in the same line only sag before creep shall be considered. The wind is supposed to act in the most unfavourable direction. generally for span between tangent supports the swing-out angle can be considered equal for the suspension set and the conductor. For span with angle supports should the actual swing-out angle be considered for the suspension set and the conductor.

(ncpt) **SE.5 Clearances at the tower, Clearances in air at the tower**

The minimum air clearance between phase conductor and earthed part of the tower shall be in accordance with Table 5.4.3/SE.5.1 and Table 5.4.3./SE.5.2. The clearances shall be fulfilled for load cases in accordance with 5.4.2.2/SE.1.

Table 5.4.3/SE.5.1 - Systems with isolated neutral or with resonant earthing

Highest voltage for equipment U_m kV	Minimum air clearance phase-to-earth	
	Load case 6 and 7 mm	Load case 8 mm
52	250[1)]	480
72,5	370	630
1) May on special conditions be allowed for highest operating voltage ≤ 55 kV.		

Clause National regulation

Table 5.4.3/SE.5.2 - Systems with low impedance neutral earthing

Highest voltage for equipment U_m kV	Minimum air clearance phase-to-earth		
	Load case 5, 6,7 and 10 mm	Load case 8 mm	Load case 9 mm
145	600	1 000	-
170	650	1 200	1 400
245	900	1 600	1 850
420	1 200	2 200	2 600

At Load Case 8 maximum 40% of the clearance in air, may be replaced by a wooden distance of at least five times the substituted clearance or by an equivalent combined insulation.

The clearance between energised parts of different phases shall be at least 1,15 times the values given for phase-to-earth clearance at Load Case 8.

(ncpt) **SE.6 Air clearance to guy wire without earth connection in system with low impedance neutral earthing**

Clearance between energised part and guy wire, which is not connected to earth, shall be in accordance with Table 5.4.3/SE.6. The clearance shall be fulfilled in Load Case 8, see 5.4.2.2/SE.1.5-1.6.

Table 5.4.3./SE.6 - Clearance in air phase-to-not earthed guy wire

Support with	Guy wire made of conductive material	Minimum clearance mm
Not earthed metallic crossarm	Lower conductive part of stay insulator	$1,8 \cdot L_1$
Not earthed metallic crossarm	Insulated part of stay insulator	$1,1 \cdot L_1$
Earthed metallic crossarm or insulator supports	Lower conductive part of stay insulator	$1,5 \cdot L_1$
Earthed metallic crossarm or insulator supports	Insulated part of stay insulator	$1,1 \cdot L_1$

where

L_1 = the arcing distance of the insulator set, (mm)

(ncpt) **SE.7 Air clearance to guy wire with earth connection in systems with low impedance neutral earthing**

If the clearance between energised part and guy wire is less than what is given in Table 5.4.3/SE.6 the guy shall be earthed and be designed for the short-circuit fault current. The maximum allowed current density for wires shall be in accordance with Table 5.4.3/SE.7.

Clause National regulation

Table 5.4.3/SE.7.1 - Maximum current density for guy-components

Component	Final temperature at short-circuit °C	Current density at design tripping time	
		1,0 s A/mm^2	0,5 s A/mm^2
Guy-wire, Steel	300	63	89
Guy-wire, ACSR	300	103[1)]	146[1)]
Accessories of steel	400	70	99
Accessories of cast steel	400	40[2)]	57[2)]

1) Only the aluminium portion shall be considered.
2) Higher values may be used if verified with tests.

Guy may be designed only for mechanical loads if the support is designed in such a way that the permissible mechanical stress is not exceeded after a guy failure when the support is subjected to normal wind load, no ice load, conductor temperature +15°C. All load conditions shall be at final stage after the conductor has been subjected to ice load and after conductor creep. This shall be fulfilled in the ultimate state with partial factors according to Table 4.2.11/SE.2, 4.2.11/SE.2.

(ncpt) **SE.8 Clearance in air to guy wire in systems with isolated neutral or resonant earthing**

The clearance in accordance with 5.4.3/SE.5 shall be fulfilled. If a short circuit phase-to-phase can cause failure of a guy due to too high temperature, the guy shall be designed in accordance with Table 5.4.3/SE.6 or Table 5.4.3/SE.7.

5.4.4 SE.1 Clearance in rural areas and not navigable waterways

(ncpt) The minimum clearances shall be in accordance with the Table 5.4.4/SE.1:

Table 5.4.4/SE.1 - Minimum clearance

Highest voltage for equipment U_m kV	Minimum clearance (m)	
	A	B
≤ 55	6	4
> 55	6 + S	4 + S

where

U_m = highest voltage for equipment

A = at maximum temperature at no wind, see 5.4.2.2/SE.2.2

B = at uniform ice load at no wind[1)] at 0°C or non-uniform ice load (see 4.2.3.2/SE.1-2) at 0°C or conductor temperature at short-circuit conditions, see 9.2.3/SE.1, 9.3.3/SE.1, 9.4/SE.1.2, 9.5.3/SE.1.

S = a voltage dependent distance in accordance with the following formulas:

at systems with low-impedance neutral earthing S = 0,005 (U_m - 55)

at systems with isolated neutral or resonant earthing S = 0,007 (U_m - 55)

1) In areas where the snow layers normally exceeds 1 m the minimum clearance shall be increased with 0,5 m.

Clause National regulation

(ncpt) **SE.2 Clearance to trees under the line**

The vertical clearances between phase conductors and growing trees shall be in accordance with Table 5.4.4/SE.2.

Table 5.4.4/SE.2 - Clearance to growing trees

Highest voltage for equipment U_m kV	Minimum clearance m
52	1,0
72,5	1,0
145	1,5
245	2,5
420	3,5

(ncpt) **SE.3 Clearance to trees beside the line**

The horizontal clearance to trees in the vicinity of the line depends on whether an earth fault is acceptable or not.

Earth fault is acceptable only in lines for U_m < 145 kV. The minimum horizontal clearance between phase conductor and the nearest part of a tree (a branch) shall be 1,0 m (for $U_m \leq$ 72,5 kV).

In lines for $U_m \geq$ 145 kV falling tree shall not cause earth fault. The clearances between a falling tree and the nearest phase conductor shall be in accordance with the Table 5.4.4/SE.3.

Table 5.4.4/SE.3 - Clearance to falling tree

Highest voltage for equipment U_m kV	Minimum clearance m
145	1,5
245	2,5
420	3,5

Horizontal clearance between covered phase conductor and trunk of tree shall be at least 1,5 m. The clearance to branches and other objects shall be sufficient to avoid wearing-damages on the covered conductor.

Clause National regulation

5.4.5.1 SE.1 Clearance to buildings, recreational areas and traffic routes, General

(ncpt)

The clearances in urban areas shall be in accordance with the Table 5.4.5.1/SE.1.

Table 5.4.5.1/SE.1 - Clearance in urban areas

Highest voltage for equipment kV	Type of conductor	Minimum clearance m
In urban areas and crossing with streets, squares		
≤ 55	phase	7
	earth wire	6
> 55	phase	7 + S
	earth wire	6

All clearances given above shall be maintained for the following conditions:

- at maximum temperature at no wind, see 5.4.2.2/SE.2.2
- at uniform ice load at no wind at 0 °C
- at non-uniform ice load (see 4.2.3.2/SE.2) at 0 °C
- at conductor temperature at short-circuit conditions, see 9.2.3/SE.1, 9.3.3/SE.1, 9.4/SE.1.2, 9.5.3/SE.1, the clearances may be decreased by 2,0 m.

S =a voltage dependent distance in accordance with 5.4.4/SE.1.

5.4.5.2 SE.1 Line above buildings

(A-dev)

It is not permitted to cross over buildings with the power lines. In substations it is permitted to cross over a building for i.e. protection equipment. In that case the clearance between conductor and the roof shall be at least 3 m. If the service voltage exceeds 55 kV the clearance shall be increased with the voltage dependent clearance S in accordance with 5.4.4/SE.1.

(A-dev)

SE.2 Line adjacent to building

The clearance between a building and the nearest phase conductor shall be in accordance with the Table 5.4.5.2/SE.2.

Table 5.4.5.2/SE.2 - Clearance to adjacent building

Highest voltage for equipment kV	Minimum clearance (m)			
	Rural areas		Urban areas	
	No wind	Wind[1)]	No wind	Wind[1)]
≤ 55	5	3	5	3
> 55	5 + S	3 + S	10	3 + S

1) The clearance shall be fulfilled for the maximum swing-out angle of the conductor at normal wind and at maximum temperature at wind.

S = a voltage dependent distance in accordance with 5.4.4/SE.1.

Clause National regulation

(ncpt) **SE.3 Line adjacent to antenna, street lighting, flag-poles etc.**

(ncpt) **SE.3.1 Clearance to street lighting**

The minimum clearance both horizontal and vertical between the nearest phase conductor and the street lightning pole shall be 4 m. This clearance shall be fulfilled for the following conditions:

- maximum swing-out angle of bare phase conductors at normal wind and at maximum temperature at wind
- maximum swing-out angle of the phase conductor at normal wind and at uniform ice load at 0°C
- at maximum temperature and no wind
- at uniform ice load and no wind at 0°C
- at non-uniform ice load at 0°C
- at conductor temperature at short-circuit conditions, see 9.2.3/SE.1, 9.3.3/SE.1, 9.4/SE.1.2, 9.5.3/SE.1, the minimum clearance shall be 2,0 m.

If the street lighting pole can be hit by a car the clearance between the nearest phase conductor and falling street lighting pole shall be at least 1 + S metres.

Overhead transmission line shall cross above the street lighting installation.

S = a voltage dependent distance in accordance with 5.4.4/SE.1.

5.4.5.3 SE.1 Traffic routes, Line crossing roads, railways and navigable waterways

(A-dev) **SE.1.1 The clearance in crossing of roads and railways**

The clearance shall be in accordance with Table 5.4.5.3/SE.1.1.

Table 5.4.5.3/SE.1.1 - Clearance in crossing of roads and railways

Highest voltage for equipment kV	Type of conductor	Minimum clearance m
Crossing with public roads		
≤ 55	phase	7
	earth wire	7
> 55	phase	7 + S
	earth wire	6
Crossing with not electrified railways		
≤ 55	phase	8
	earth wire	7
> 55	phase	8 + S
	earth wire	7

Clearances given for crossing with public road shall also be valid for private roads with public traffic and private roads where transportation with high vehicles can take place, e.g. roads with traffic from timber-lorries.

Clause National regulation

In crossing of an electrified railway the clearance between the top surface of the rail and the conductor in the overhead line is given by the owner of the railway but the clearance shall be at least 13,5 m.

The clearances given above shall be fulfilled for the following conditions:

- at maximum temperature and no wind
- at uniform ice load and no wind at 0°C
- at non-uniform ice load at 0°C
- at conductor temperature at short-circuit conditions, see 9.2.3/SE.1, 9.3.3/SE.1, 9.4/SE.1.2, 9.5.3/SE.1, the clearances may be decreased by 2,0 m.

S = a voltage dependent distance in accordance with 5.4.4/SE.1.

(A-dev) **SE.1.2 The clearance in crossing with private road**

The clearance shall be in accordance with Table 5.4.5.3/SE.1.2.

Table 5.4.5.3/SE.1.2 - Clearance in crossing with private road

Highest voltage for equipment kV	Minimum clearance m
≤ 55	6
> 55	6 + S

The clearance given in Table 5.4.5.3/SE.1.2 shall be fulfilled at maximum temperature and no wind.

The clearances may be decreased by 2 m at the following conditions:

- at uniform ice load and no wind at 0°C
- at non-uniform ice load at 0°C
- at conductor temperature at short-circuit conditions, see 9.2.3/SE.1, 9.3.3/SE.1, 9.4/SE.1.2, 9.5.3/SE.1.

(A-dev) **SE.1.3 Crossing of navigable waterways can be of two kinds**

(A-dev) **SE.1.3.1 Clearance prescribed by the authorities**

The minimum clearance between conductor and normal high-water level shall be in accordance with Table 5.4.5.3/SE.1.3.1.

Table 5.4.5.3/SE.1.3.1 - Clearance prescribed by the authorities to normal high-water level at waterways

Highest voltage for equipment U_m kV	Minimum clearance m
≤ 170	W + 1,50
170 < U_m ≤ 245	W + 2,00
245 < U_m ≤ 420	W + 2,75

where

W = free space for sailing from normal high-water level given by authorities.

Clause National regulation

(A-dev) **SE.1.3.2 Clearance not prescribed by the authorities**

The minimum clearance between conductor and normal high-water level shall be in accordance with Table 5.4.5.3/SE.1.3.2.

Table 5.4.5.3/SE.1.3.2 - Clearance not prescribed by the authorities to normal high-water level at waterways

Highest voltage for equipment kV	Minimum clearance m
≤ 55	7
> 55	7 + S

The clearance shall be fulfilled for both phase conductors and earth wires.

The clearance shall be taken from the normal high-water level. The conductors shall be placed on such a level above normal high-water level that they will not restrict, hinder or cause danger to the traffic. Respect shall also be taken to sailing boats, ice-yachts and similar equipment for sports.

This clearance shall be fulfilled for the following conditions:

- at maximum temperature and no wind
- at uniform ice load and no wind at 0°C, the clearances may be decreased by 2,0 m
- at non-uniform ice load at 0°C, the clearances may be decreased by 2,0 m
- at conductor temperature at short-circuit conditions, see 9.2.3/SE.1, 9.3.3/SE.1, 9.4/SE.1.2, 9.5.3/SE.1, the clearances may be decreased by 2,0 m.

S = a voltage dependent distance in accordance with 5.4.4/SE.1.

5.4.5.4 SE.1 Other power lines or overhead telecommunication lines, Crossing of other lines

(ncpt) The clearance to trees for line or demarcation span shall be in accordance with 5.4.4/SE.2-3.
The crossing can be either with a separating structure or without.

The clearances in Table 5.4.5.4/SE.1.1 and Table 5.4.5.4/SE.1.2 shall be fulfilled in the most unfavourable of the following load cases:

a) upper line at maximum temperature and at no wind
lower line with bare conductor at +35°C and no wind

b) upper line at 0°C and at uniform ice load and no wind
lower line with bare conductor at 0°C

c) upper line at 0°C and at non-uniform ice load
lower line with bare conductor at 0°C

d) upper line with bare conductor at 0°C
lower line with bare conductor at 0°C

e) upper line at short-circuit temperature
lower line at maximum temperature and at no wind

Clause National regulation

f) upper line at minimum temperature increased with temperature-rise due to short-circuit current
lower line with bare conductor at minimum temperature and at no wind.
The temperature-rise is defined as the difference between short-circuit temperature and maximum temperature

In load cases *a - f* the sag in the final stage after conductor creep shall be used in the upper line and the sag in the initial stage before conductor creep in the lower line.

Table 5.4.5.4/SE.1.1 - Minimum clearance in crossing without separating structure

Lower line	**Minimum vertical clearance (m) at highest voltage for equipment kV**	
	≤ 55	**> 55**
$U_m \leq 1$ kV or telecommunication	4[1)]	4 + S
$U_m > 1$ kV Phase conductor Earthwire	 4[1)] 1,5	 2,5 + S, but not less than 4 1,5 + S
1) The clearance may be reduced to 2,5 m if the distance from the crossing point to the nearest pole in the two lines is ≤ 15 m.		

Table 5.4.5.4/SE.1.2 - Minimum clearance in crossing with separating structure

Lower line		**Minimum vertical clearance (m) at highest voltage for equipment U_m kV**	
		≤ 55	**> 55**
$U_m \leq 1$ kV or telecommunication			
distance *A*		1	1 + S
distance *B*		1,5[1)]	1,5[1)]
distance *C*		2,5[2)]	2,5 + S
U_m >1 kV			
distance *A*		1	1 + S
distance *B*	at $U_m \leq 170$ $170 < U_m \leq 245$ $245 < U_m \leq 420$	1,5[4)] - -	1,5[4)] 2 3,5
distance *C* [3)]	at $U_m \leq 170$ kV $170 < U_m \leq 245$ $245 < U_m \leq 420$	2,5	2,5 + S 3 + S 4,5 + S

Clause National regulation

NOTES: S is voltage depending additional distance in accordance with 5.4.4/SE.1.

1) If separation structure is self-supported the distance A, see Figure 5.4.5.4/SE.1, can be reduced to 1 m.

2) If the crossing span is situated close to a limiting span and if the horizontal distance between the crossing point and the nearest pole of the crossing line is more then 25% of the length of the crossing span, then the distance C, see Figure 5.4.5.4/SE.1, shall be 3 m.

3) The distance C, see Figure 5.4.5.4/SE.1, is decided in such a way that the free space between the lower line and the separating structure is at least equal to the flashover distance of the phase insulator in the lower line.

4 If the separating structure is self-supported the distance B, see Figure 5.4.5.4/SE.1, can be reduced to 1 m if the voltage of the lower line is less than or equal to 55 kV. If lower line has voltage ≤55 kV and earthwire over the phases then the distance between earthwire and separating structure can be reduced to 0,5 m. Distance C, see Figure 5.4.5.4/SE.1, shall be kept in both cases.

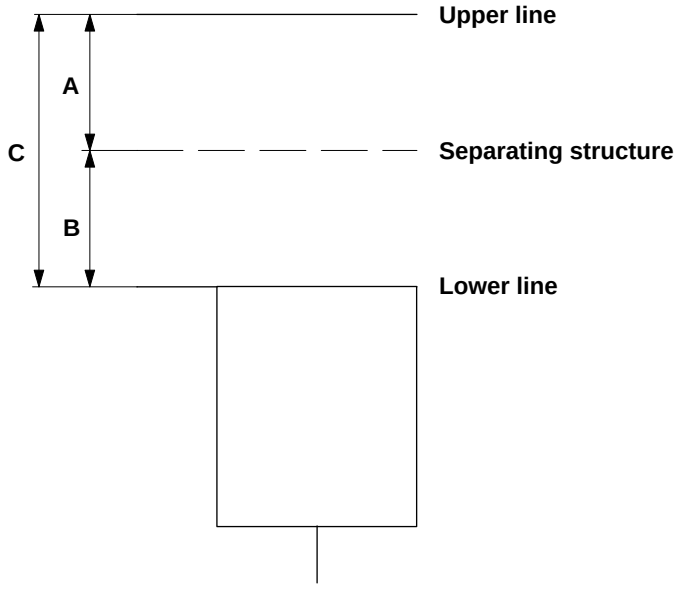

Figure 5.4.5.4/SE.1 - Clearance in crossing with separating structure

(A-dev) **SE.2 Parallel lines of separate utilities in the same supports**

It is not permitted to have parallel lines of separate utilities in the same supports.

(ncpt) **SE.3 Parallel or converging lines on separate supports**

When lines are running in the vicinity of each other there shall be an appropriate clearance for working between the two lines. With respect to this the horizontal clearance between support and nearest live part in the other line shall be at least 2 m for $U_m \leq 55$ kV and at least 2 + S for $U_m > 55$ kV. This clearance shall be fulfilled for the following conditions:

- at maximum swing-out angle of the bare phase conductors at normal wind and at maximum temperature at wind
- at maximum swing-out angle of the phase conductor at normal wind and at uniform ice load at 0°C

S = a voltage dependent distance in accordance with 5.4.4/SE.1.

The clearance between energised part in one line and a guy in the other line shall be at least 1,1 times the clearance given in 5.4.3/SE.6 Table 5.4.3/SE.6.

Clause National regulation

If the horizontal clearance can not be fulfilled the vertical clearance shall be at least for the following load conditions:

- at maximum temperature and no wind, the clearance shall be 4,0 m.
- at uniform ice load and no wind at 0°C, the clearance shall be 4,0 m.
- at non-uniform ice load (see 4.2.3.2/SE.2), the clearance shall be 4,0 m.
- at conductor temperature at short-circuit conditions, the clearance shall be 2,0 m.

Overhead line with $U_m \geq 100$ kV shall not cross over a telecommunication pole with junction or joint box(es).

5.4.5.5 SE.1 Recreational areas (Playgrounds, Sports areas etc.)

(A-dev) It is not permitted to cross schoolyards, sports grounds, trotting-tracks, shooting-ranges, camping-grounds, bathing- and playgrounds and places for spectators with power lines.
The horizontal distance between phase conductor and the boundary of the above mentioned areas shall be at least 20 m at no wind conditions.

Power lines shall not be routed in dangerous proximity to areas where combustible, flammable or explosive goods are stored.

The minimum clearance between phase conductor and the nearest border of the area with storage of flammable goods shall, at no wind condition, be in accordance with Table 5.4.5.5/SE.1.1.

Table 5.4.5.5/SE.1.1 - Clearance to area with flammable goods

Highest voltage for equipment kV	Horizontal clearance m
52	15
72,5	15
84	30
145	30
170	30
245	45
420	60

The minimum clearance between phase conductor and building for storage of explosives shall, at no wind conditions, be in accordance with Table 5.4.5.5/SE.1.2.

Clause National regulation

Table 5.4.5.5/SE.1.2 - Clearance to building with explosives

Highest voltage for equipment kV	Horizontal clearance m
< 145	50
≥ 145	100

6 Earthing systems

6.2.2.1 SE.1 Earth electrodes

(A-dev) Earth electrodes shall be of specially arranged sheets, wires, pipes or angel bars of copper or hot dip galvanised steel or of wires or rods of copper clad steel.
The minimum cross sections and dimensions shall be in accordance with Table 6.2.2.1/SE.1.

Table 6.2.2.1/SE.1 - Minimum cross sections of earth electrodes

Material	Type of section	Dimensions
Copper sheet		1 mm · 0,5 m^2
Copper wire	cross section	25 mm^2
Steel wire	cross section	50 mm^2
Steel tube	outside diameter	49 mm
Steel bare	angle	60 · 60 · 6 mm
Copper clad steel wires	cross section	25 mm^2
Copper clad steel rod	diameter	14,6 mm

6.2.2.2 SE.1 Earthing conductors

(A-dev) Earthing conductor shall be of copper, hot dip galvanised steel or copper clad steel. Above ground it even may be of aluminium or aluminium alloy.
Shield of copper or lead/steel band in power cables, in accordance with the Swedish Standard for power cables with U_m greater than 1 kV, may be used as earthing conductor for the protection and system earthing.

Earthing conductor shall be designed so that the maximum earth fault current will not cause any dangerous heating at the conductor or its environments.

The minimum cross section shall be in accordance with Table 6.2.2.2/SE.1.

Table 6.2.2.2/SE.1 - Minimum cross sections of earthing conductor

	Copper mm^2	Steel mm^2	Copper clad steel mm^2	Aluminium or alloyed aluminium mm^2
Earthing conductor	25	50	25	-
Other conductor for earthing purpose:				
Above ground level	10	25	25	30
Into ground	25	50	25	-

Clause National regulation

6.2.4.2 SE.1 Measures for the observance of permissible touch voltages

(A-dev) In for human being exposed locations, such as urban areas and public access areas, protection earthing shall be installed at supports and guy anchors in order to prevent impermissible high step- and touch voltages.
Protection earthing shall be performed by installation of protective rings on a depth of 0,5 m and at a distance of 1 m from the exposed part.

If the protection earthing is insufficient, touch protection insulation shall be installed on parts of the support reachable by human from the ground level.

At certain locations, i.e. beaches, swimming pools, schoolyards and sport grounds, additional protective measures may be required.

6.3 SE.1 Construction of earthing systems

(A-dev) Bracket and crossarms in supports for more than one overhead line shall always be connected to earth.

(ncpt) **SE.2**

If, in parallel overhead lines, the costs for interruption of the service at simultaneous line faults are high, each line shall be erected on separate supports and equipped with earth wires. The support earthing shall be separated from that of the other line. If the support is situated on rocks or in soil as has a high resistivity, the distance between the earthing systems of the two lines shall be at least 30 m.

6.3.1 SE.1 Installation of earth electrodes and earthing conductors

(A-dev) Bare earthing conductors shall above ground level be perspicuous installed in order to be easily visible and accessible to most extent. It shall also be installed so that mechanical and chemical damages can be avoided.
Joints shall, if possible, be avoided.

Earthing conductors with cross section less than 50 mm^2 shall be protected against mechanical damage on a height of 1,5 m above ground level and to a depth of 0,5 m into the ground.

In the earthing, where applicable, a bolted current carrying connector shall be installed so that the earth electrode can be disconnected from the earth conductor in order to measure the individual resistance of the earth electrode. The connector shall not be able to be opened without any tools.

6.4 SE.1 Earthing measures against lightning effects

(ncpt) Overhead lines for U_m greater than 45 kV should be equipped with entry-protection on a section in the vicinity of the substation. The length of the shield wire, in metres, shall be at least three times the U_m of the line with a minimum length of 200 m. Earthed shield wires, over horizontal erected conductors, normally gives protection against lightning if the shielding angle, measured between a vertical line through the shield wire and a line to the outer conductor, is less then 25 - 30 degrees. Alternatively the crossarms can be earthed with an efficient longitudinal counterpoise earth wire.

Clause National regulation

7 Supports

7.1 SE.1 Initial design considerations

(ncpt) For calculation of the design value of material strength the partial factor method is used with two partial factors γ_M and γ_n at the characteristic value of the material property. The method is in accordance with BFS 1998:39.

$$X_d = \frac{X_K}{\gamma_M \cdot \gamma_n}$$

The partial factor γ_n is depending on safety class. The safety class for overhead electrical transmission lines shall be Class 2 with γ_n = 1,1 in ultimate limit states and with γ_n = 1,0 in serviceability limit states.

SS-EN or SS-ENV Standard shall be used with the Swedish NAD(S).

NOTE BFS 1998:39 is the Swedish Building and Design Regulations.

7.2 SE.1 Materials

(ncpt) The material shall be selected in accordance with the referenced codes in clause 7/SE and SS-EN/SS-ENV Standards with NAD(S).

(ncpt) **SE.2 Minimum thickness of material in steel members**

Minimum thickness of material in steel members shall be 4 mm for open sections and 3 mm for hollow sections. For redundant members these values can be reduced to 3 mm and 2,5 mm respectively. Hollow sections shall be equipped with a drainage system.

(ncpt) **SE.3 Corrosion protection**

If steel material is not rust resistant it shall be protected by galvanising or painting, see 7.9 and 7.9/SE.

(ncpt) **SE.4 Weathering steel**

If weathering steel shall be used the effect of rust shall be considered in accordance with the recommendations from [3] and [4].

NOTE [3] and [4] is recommendations for selection of weathering steel in Sweden.

(ncpt) **SE.5 Timber**

Pine (Pinus Sylvestris) is recommended.

7.3.1 SE.1 Lattice steel towers, General

(ncpt) For 7.3 and Annex J shall [7] be considered.

(ncpt) **SE.2 Alternative to SS-ENV 1993-1-1**

The steel design shall be in accordance with [2], which also specify γ_M. For hot-dip galvanised, hot-rolled, 90° angle bars buckling curve "a" in [2] can be used.

Calculation of buckling resistance shall consider essential eccentricity in the attachment of the member or bending moment in accordance with rules in [2].

For an angle bar connected in only one flange the slenderness ratio L/i shall be calculated in accordance with J.6.3.1/SE.1.2.

Clause National regulation

Resistance of members shall consider the thickness ratio b/t in accordance with rules in [2]. For a hot-rolled, 90° angle bar the limit for unreduced area shall be in accordance with the formula

$$\frac{b}{t} \leq \frac{260}{\sqrt{f_{yk}}}$$

where

b = the width of the angle leg to the back of the angle.

For cold-formed bars the buckling calculation shall consider torsional-flexural buckling, see [2] or Project Specification.

Limits for slenderness ratio and upper limit for ratio b/t, see the Project Specification.

A bracing bar may be attached by one bolt at each end.

NOTE [2] is the Swedish regulations for steel structures. The regulations contain of requirements for design in ultimate and serviceability limit states, calculation methods, design by testing, requirements for material, fabrication, control and maintenance.

7.3.5.1.1 SE.1 General (Chapter 5.1.1)

(ncpt) The partial factor γ_M, here including γ_n for safety class 2, shall be taken as follows:

- resistance of cross sections $\gamma_{M0} = \gamma_{M1} = 1{,}15$
- resistance of members to buckling $\gamma_{M1} = 1{,}15$
- resistance of net section at bolt holes $\gamma_{M2} = 1{,}32$

7.3.6.1.1 SE.1 General (Chapter 6.1.1)

(ncpt) The partial factor γ_M here including γ_n for safety class 2, shall be taken as follows:

- resistance of bolted connections $\gamma_{Mb} = 1{,}32$
- resistance of riveted connections $\gamma_{Mr} = 1{,}32$
- resistance of welded connections $\gamma_{Mw} = 1{,}32$

7.3.7 SE.1 Fabrication and erection (Chapter 7)

(ncpt) Requirements for manufacturing and control see reference [7].

(ncpt) **SE.2 Amendment**

At cutting and punching or other working the temperature of the steel shall not be lower than +5 °C.

If forming or unsuitable heating has caused reduction in toughness of the steel it is permitted to heat treatment in an appropriate way to restore the toughness of the steel.

Straightening and similar work, which is made by hammering or pressing, is allowed in cold condition, but the temperature of the steel shall not be lower than +5 °C.

Other shaping in cold condition is only permitted when tests show that the material withstands cold forming without cracks or dangerous stresses occurs which otherwise in conjunction with subsequent hot-dip galvanising can cause inter-crystalline crack formation.

Clause National regulation

Holes may be punched in steel up to a maximum thickness of 13 mm and in qualities in accordance with SS-EN 10 025+A1 and SS-EN 10 113 or steel with corresponding characteristics, if the thickness is less than the hole diameter. For other steels it shall be checked that punching does not cause cracks or brittleness. In other cases the hole shall be drilled or alternatively punched with a diameter 3 mm smaller than the nominal diameter and thereafter drilled to the final diameter.

Grades after punching and drilling shall be removed. Holes in fills may be punched.

For bolts a washer shall be used beneath the nut. For bolts with shear load the threads shall end outside the connected parts. The outlet of the threads may end up to 5 mm into one of the connected parts with a maximum of one third of the thickness of the connected part. The nut shall be locked by punching or chisel hack on the threads or in another secure way.

7.3.8 SE.1 Design assisted by testing (Chapter 8)

(ncpt) For design carried out by calculation and verified by test, the test load $F_{test,R}$ shall be determined from:

- for resistance of yielding and buckling $F_{test,R} = 1{,}21 \cdot F_{Sd}$
- for resistance of tensile strength $F_{test,R} = 1{,}32 \cdot F_{Sd}$
- for resistance of bolted, riveted and welded connections $F_{test,R} = 1{,}32 \cdot F_{Sd}$

F_{Sd} is the design load for the ultimate limit state.

$F_{test,R}$ in safety class 2, for another safety class multiply by $\gamma_n/1{,}1$.

For design carried out only by testing the evaluation shall be done considering the number of tests according to the BFS 1998:39.

NOTE BFS 1998:39 is the Swedish Building and Design Regulations.

7.4 SE.1 Steel poles

(ncpt) For 7.4 and Annex K shall [7] be considered.

7.4.5.1 SE.1 Basis (Chapter 5.1)

(ncpt) The partial factor γ_M here including γ_n for safety class 2, shall be in accordance with the following:

- resistance of cross sections $\gamma_{M0} = \gamma_{M1} = 1{,}15$
- resistance of net section at bolt holes $\gamma_{M2} = 1{,}32$

7.4.6.1 SE.1 Basis (Chapter 6.1)

(ncpt) The partial factor γ_M, here including γ_n for safety class 2, shall be in accordance with the following:

- resistance of bolted connections
  - bolts in shear or bearing $\gamma_{Mbs} = 1{,}32$
  - bolts in tension $\gamma_{Mbt} = 1{,}32$
- resistance of welded connections $\gamma_{Mw} = 1{,}32$

7.4.7 SE.1 Fabrication and erection (Chapter 7)

(ncpt) Requirements according to 7.3.7/SE.1-2 shall be considered.

Clause National regulation

7.4.8 SE.1 Design assisted by testing (Chapter 8)

(ncpt) For design carried out by calculation and verified by test, the test load $F_{test,R}$ shall be determined from:

- for resistance of yielding and buckling $F_{test,R} = 1{,}21 \cdot F_{Sd}$
- for resistance of tensile strength $F_{test,R} = 1{,}32 \cdot F_{Sd}$
- for resistance of bolted, riveted and welded connections $F_{test,R} = 1{,}32 \cdot F_{Sd}$

F_{Sd} is the design load for the ultimate limit state.

$F_{test,R}$ in safety class 2, for another safety class multiply by $\gamma_n/1{,}1$.

For design carried out only by testing the evaluation shall be done considering the number of tests according to the BFS 1998:39.

NOTE BFS 1998:39 is the Swedish Building and Design Regulations.

7.5 SE.1 Timber poles

(ncpt) Alteration of 7.5.

(ncpt) **SE.1.1 Materials**

Materials shall comply with 7.2/SE.5 and [8].

(ncpt) **SE.1.2 Design**

Guyed or self-supporting poles that are embedded in ground or attached to rock can be calculate with first order theory. The initial crookedness has not to be considered in the design of these poles if a theoretical straight line drawn from the centre of the top to the centre of the butt is inside the pole. The internal forces, moments and stresses shall be determined using elastic analysis.

The design values in this clause are valid for Safety Class 2.

For round timber and timber sleepers of Pinus Sylvestris the design values of resistance in ultimate limit states shall be in accordance with following:

- bending 27,3 MPa
- shearing 2,4 MPa
- compression, without risk of buckling
  perpendicular fibres 3,6 MPa
  along fibres 13,2 MPa
- modulus of elasticity
  for bending[1)] 10 000 MPa
  for Euler-buckling 4760 MPa

NOTE 1) The same value can be used in serviceability limit states.

Supports exposed to permanent bending loads the design value for bending is 14,3 MPa in Load case 2a in accordance with 4.2.10.2/SE.2.2.

For joining of timber the design resistance shall be calculated in accordance with SS-ENV 1995-1-1 + [8]. For the design of steel bars and bolts see 7.3 and 7.3/SE.

Clause National regulation

For design carried out by calculation and verified by test, the test load $F_{test,R}$ shall be determined from $F_{test,R} = \gamma_M \cdot \gamma_n \cdot F_{Sd}$ with $\gamma_M = 1,7$ for resistance of bending.

F_{Sd} is the design load for the ultimate limit state.

For design carried out only by testing the evaluation shall be done considering the number of tests according to the BFS 1998:39.

For sawn structural timber the design resistance shall be calculated in accordance with SS-ENV 1995-1-1 + [8].

NOTE BFS 1998:39 is the Swedish Building and Design Regulations.

(SE.1.3 deleted in corrigendum)

(ncpt) **SE.1.4 Rot**

The resistance of timber poles can be reduced by rot that normally arises in the ground level. The rot can be of different types and the poles are affected differently depending on impregnation type, the geographical location and the type soil.

The design value given above for bending considers inspection intervals and takes into account changes in strength caused by rot etc. For poles with rot the design bending resistance can be increased by 33 % for the calculation with the undamaged cross section. The design buckling resistance can be calculated with the modulus of elasticity for Euler-buckling increased by 33 %. In this case the diameter of remaining undamaged wood at ground level shall not be less than the top diameter of the pole. Increase of design resistance for bending and buckling is not allowed for poles at crossings with roads, railways or other underlying overhead lines.

If a pole is reinforced due to rot the elasticity and strength shall be restored to the values of the undamaged pole. Remaining undamaged wood within the defected area shall not be regarded in the design of the reinforcing.

The material in the reinforcing shall be designed in accordance with reference codes in clause 7/SE. For full scale testing see 7.11/SE.1.

7.6.1 SE.1 Concrete poles, General

(ncpt) [6] shall be considered for 7.6.

(ncpt) **SE.2 Alternative to SS-ENV 1992-1-1**

Concrete poles shall be designed in accordance with [1], which also specify γ_M.

NOTE [1] is the Swedish regulations for concrete structures. The regulations contain of requirements for design in ultimate and serviceability limit states, design methods, design by testing, requirements for material, fabrication and control.

(ncpt) **SE.3 Requirements**

Requirements for manufacturing and control see reference in [6].
Concrete poles shall be made in a factory. The manufacturer shall meet the requirements for control in accordance with [1].

Clause National regulation

The finished pole surface shall be smooth. Cavities can occur depending on the casting technique. The total area of cavities shall be less than 5 cm^2 per 100 cm^2 of the pole surface. The average depth of cavities shall be less than 3 mm. Pole with larger area of cavities can be accepted if concrete cover to links, determined by measurement, is at least 10 mm plus the average depth of cavities.

Repair of blowholes may be accepted if the reparation results in the same lifetime as the pole. Hole after form tie shall be sealed with concrete plug and water-cement paste.

The top shall be provided with a cover of concrete or concrete casting.

The inside and outside of the pole surfaces shall be coated, for location in aggressive soil with pH less than 4,5 or content of lime aggressive carbon acid larger than 60 mg/dm^3, with bitumen or similar on the butt part up to 0,5 m over ground level.

Marking of the pole shall be placed 4 m from the butt end and show manufacturer, date of manufacturing, weight and if required type mark. The marking shall be resistant.

7.6.2 SE.1 Basis of design

(ncpt) The effect of loads shall include moments from the design value of all vertical loads including dead weight, i.e. second order theory.
For Load case 5a in accordance with 4.2.10.2/SE.2.7 the load partial factor γ_Q can be reduced to γ_Q = 1,1 for the conductor tension load in tangent and angle supports.

7.6.3 SE.1 Materials

(ncpt) The concrete strength shall be C40/50 - C50/60 and have a water-cement ratio of maximum 0,45. Higher strength may be used after testing in accordance with SS-ENV 1992-1-1. Non spun poles shall have a percentage of air to be frost resistant.
If the strength of the concrete, at delivery, is lower than the final strength the lower value shall be used for resistance and crack calculations.

Concrete cover for industrial manufacturing shall be at least 15 mm for transverse reinforcing and 20 mm for longitudinal reinforcing with bar diameter of maximum 16 mm. For a larger bar diameter see SS-ENV 1992-1-1 + [6].

(ncpt) **SE.2 Materials for 7.6.1/SE.2**

Design in accordance with [1]:

The concrete quality shall be of Class I with the strength K50 - K80 and have a water-cement ratio of maximum 0,45. Higher strength may be used after testing in accordance with the BFS 1998:39 and [1]. Non spun poles shall have a percentage of air in accordance with [1] to be frost resistant.

If the strength of the concrete, at delivery, is lower than the final strength the lower value shall be used for resistance and crack calculations.

Concrete cover for industrial manufacturing shall be at least 15 mm for transverse reinforcing and 20 mm for longitudinal reinforcing with bar diameter of maximum 16 mm. For a larger bar diameter see [1].

NOTE BFS 1998:39 is the Swedish Building and Design Regulations.

Clause National regulation

7.6.4 SE.1 Serviceability limit states

(ncpt) No limit for Maximum deflection, if not otherwise stated in the Project Specification.

- Tangent poles: Maximum width of cracks, in case of reinforced concrete 0,2 mm.
- Other poles: Maximum width of cracks, in case of reinforced concrete 0,1 mm.

For tangent and angle poles in Load case 5a in accordance with 4.2.10.2/SE.2.7 there are no limits for the width of cracks in reinforced concrete or in pre-stressed concrete.

The limits for widths of cracks are the same for the load cases transport, erection and conductor stringing as for the wind loading cases.

Pre-stressed concrete poles shall not crack in for the load cases wind load, transport, erection and conductor stringing. The pre-stressing force shall be considered both before and after relaxation. For transport and erection the partial factor is $\gamma_G = 1{,}3$ in accordance with 4.2.11/SE.1.

The pole can be considered non-cracked for concrete tension less than $0{,}9 \cdot f_{ctm}$, where f_{ctm} is the mean value of concrete tensile strength in accordance with SS-ENV 1992-1-1.

For the alternative [1] the pole can be considered non-cracked for concrete tension less than $0{,}52\sqrt{K}$ MPa, where K is the concrete cube quality in MPa, or tension stress estimated by testing in accordance with [1].

7.6.5 SE.1 Ultimate limit states

(ncpt) **SE.1.1 (2) Partial factor**

The pre-stressing force shall be considered both before and after relaxation of the steel.

For the alternative [1] γ_P is 1,0.

(ncpt) **SE.1.2 (3) Partial factor**

Partial factor γ_{MC} for concrete and γ_{MS} for steel shall be taken from [6].

For the alternative in 7.6.1/SE.2 the partial factors γ_{MC} and γ_{MS} are specified in [1].

(ncpt) **SE.1.3 Buckling resistance**

For buckling resistance the design value of Euler load shall be divided by 1,3. The Euler load shall be calculated with the design value of modulus of elasticity, i.e. E_{ck} divided by γ_{MC} and γ_n.

7.6.6 SE.1 Design assisted by testing

(ncpt) For design carried out by calculation and verified by test, the test load $F_{test,R}$ shall be determined from:

- for bending test with rupture in concrete $F_{test,R} = \gamma_{MC} \cdot \gamma_n \cdot F_{Sd}$
- for bending test with rupture in steel $F_{test,R} = \gamma_{MS} \cdot \gamma_n \cdot F_{Sd}$
- for instability test $F_{test,R} = 1{,}15 \cdot \gamma_{MC} \cdot \gamma_n \cdot F_{Sd}$

Clause National regulation

F_{Sd} is the design load for the ultimate limit state.

For design carried out only by testing the evaluation shall be done considering the number of tests according to the BFS 1998:39.

No limit for Maximum deflection and Maximum residual deflection, if not otherwise stated in the Project Specification.

NOTE BFS 1998:39 is the Swedish Building and Design Regulations.

7.7.3 SE.1 Materials

(ncpt) The guy steel wire strands shall be in accordance with the Swedish Standards SS 424-08-06.

The minimum breaking strength of the guy shall be 30 kN.

NOTE SS 424 08 06 gives the requirements for manufacturing of zinc-coated steel wire strands.

7.7.5.1 SE.1 Basis (2)

(ncpt) The partial factor γ_M for the guy wire is

- γ_{M2} = 1,40 for tangent supports
- γ_{M2} = 1,55 for permanent loaded guy, e.g. angle and terminal supports.

The design value of resistance for the guy is

$$X_d = \frac{X_K}{\gamma_{M2} \cdot \gamma_n}$$

7.7.5.2 SE.1 Calculation of internal forces and moments

(ncpt) Amendment to last paragraph:
For a lattice column in both ends hinged the additional shear force is 1,7 % of the axial force in the column.

7.7.5.3 SE.1 Second order analysis

(ncpt) **SE.1.1 Amendment to third paragraph**

The initial crookedness for other materials than steel and timber shall be selected in accordance with the material design standard.

(ncpt) **SE.1.2 Amendment to fifth paragraph**

The eccentricity at the bottom end section can be up to the radius of the underlying washer, if not otherwise is stated in the Project Specification.

7.7.6 SE.1 Design details for guys

(ncpt) Amendment to first paragraph
The design value for modulus of elasticity shall be 180 000 / γ_n MPa for guy steel wire strands in accordance with SS 424 08 06.

7.8 SE.1 Other structures

(ncpt) Amendment

(ncpt) **SE.1.1 Glulam poles**

Glulam poles shall be designed and manufactured in accordance with the SS-ENV 1995-1-1 + [8].

Redwood with a large amount of sapwood shall be aimed at. The glue shall be water and weather resistant and shall endure temperatures from -50 °C to +200 °C. Heartwood shall be avoided in the surface layer. End surfaces should be protected against moisture ingress.

Clause National regulation

The anti-rot shall not be deteriorated by surface plane-off or other treatment after the impregnation. New holes and other changes which can not be avoided are allowed if the surface is treated afterwards in an appropriate way.

Second order theory can be used in ultimate limit states instead of interaction formulas.

In Load Case 5a calculated in accordance with 4.2.10.2/SE.2.7. Alternative assumption, the design resistance in ultimate limit states can be multiplied by 1,5 in tangent and angle supports. For full scale testing in accordance with 7.11/SE.1 the loads can be divided by 1,5 for this load case.

For buckling resistance the design value of Euler load shall be divided by 1,4.

Supports exposed to permanent bending loads the design value for bending shall be multiplied by 0,55 in Load case 2a in accordance with 4.2.10.2/SE.2.2. This value includes the reduction factor for pole embedded in soil.

The pole shall be marked with glue class, strength class, impregnation class, manufacturer and manufacturing number and year. The marking shall be placed 4 m from the butt-end.

For sawn structural timber the design resistance shall be calculated in accordance with 7.5/SE.1.2.

(ncpt) **SE.1.2 Aluminium**

The calculation of resistance and manufacturing of supports made of aluminium shall be in accordance with BFS 1998:39.

NOTE BFS 1998:39 is the Swedish Building and Design Regulations.

7.9 SE.1 Corrosion protection and finishes, painting on steel

(ncpt) Since in general painting is an inferior corrosion protection compared to galvanising it is recommended to increase the thickness of material with some millimetre for painted parts. This is important in marine atmosphere and in corrosive industrial atmosphere where it must be considered if only painting is sufficient as corrosion protection. The paint shall be selected in accordance with the [2].

7.9.2 SE.1 Galvanising

(ncpt) Zinc coating shall be in accordance with SS-EN ISO 1461 with minimum coating thickness in accordance with Table 7.9.2/SE.1.

Table 7.9.2/SE.1

Thickness of the steel	**Fe/Zn 95**		**Fe/Zn 115**		**Fe/Zn 215**	
	Local coating thickness	Average coating thickness	Local coating thickness	Average coating thickness	Local coating thickness	Average coating thickness
mm	µm	µm	µm	µm	µm	µm
t > 6	85	95	100	115	190	215
t ≤ 6	70	85	85	95	115	140

Fe/Zn 95: for steel in air
Fe/Zn 115: for wedged rock anchors/eyebolts
Fe/Zn 215: for steel in ground

Clause National regulation

Zinc coating on bolts shall be in accordance with SS-EN ISO 10684. Galvanised threads shall be undersized in accordance with ISO 965-4. Members with threaded parts shall fulfil Fe/Zn 95, Fe/Zn 115 and Fe/Zn 215 except in the threads and on a length of maximum five times the bar diameter from the end of the threads, where the zinc coating shall be in accordance with SS-EN ISO 10684.

Damages in galvanising surface can be repaired by spray galvanising or by painting twice with zinc rich paint, zinc powder 92-95 % of dry weight. The damaged surface shall be carefully cleaned by sand blasting or similar and dried and preheated before treatment.

Galvanising of steel wires shall be in accordance with SS-EN 50189, Class A zinc coating.

In marine atmosphere and in corrosive industrial atmosphere it must be considered if only galvanising is sufficient as corrosion protection.

7.9.3 SE.1 Metal spraying

(ncpt) The zinc layer shall not be less than the requirements for hot-dip galvanising.

7.9.7 SE.1 Protection of sleepers and gluelam poles

(ncpt) Sleepers and gluelam poles shall be impregnated to fulfil penetration and retention requirements. The penetration requirement to be fulfilled is class P8 of EN 351-1. The retention requirement to be fulfilled shall correspond to hazard class H4 of EN 335. The retention requirement to be fulfilled for glulam in ground and one metre above ground into 20 mm depth from the wood surface shall correspond to hazard class H5 of EN 335.

The H5 retention requirement is fulfilled if impregnation is done both with CCA preservatives to class H4 and with creosote oil to class H4 after drying.

Impregnation of glulam shall be checked in accordance with [5].

7.11 SE.1 Loading tests

(ncpt) Amendment:
The support shall without any permanent deformation withstand all load cases in serviceability limit states.

The support shall withstand all load cases in ultimate limit states. The design loads in ultimate limit states shall be multiplied by $\gamma_M \cdot \gamma_n$ for the critical section, see 7.3-7.6/SE.

For design carried out only by testing the evaluation shall be done considering the number of tests according to the BFS 1998:39.

NOTE BFS 1998:39 is the Swedish Building and Design Regulations.

Clause National regulation

8 Foundations

8.2 SE.1 General requirements

(snc) Amendment

(snc) SE.1.1 Frostproof depth

Foundations shall be placed on frostproof depth. The frostproof depth is depending on intensity and duration of cold weather, soil type and snow on ground. In Figure 8.2/SE.1.1 the frostproof depths are given in mineral soil, e.g. gravel, sand, moraine and clay, without snow. With snow on ground the frostproof depth is in general maximum 1,5 m for normal mineral soil. In organic soil, e.g. peat, mud and topsoil, the frostproof depth is lower than in mineral soil. The frostproof depth in organic soil is in general about half of the depth in mineral soil.

Placing on frostproof depth does not secure from frost heave. If possible, measures shall be taken to avoid frost heave by flank grip. Blocking of timber poles by rocks shall be avoided in frost-susceptible soil.

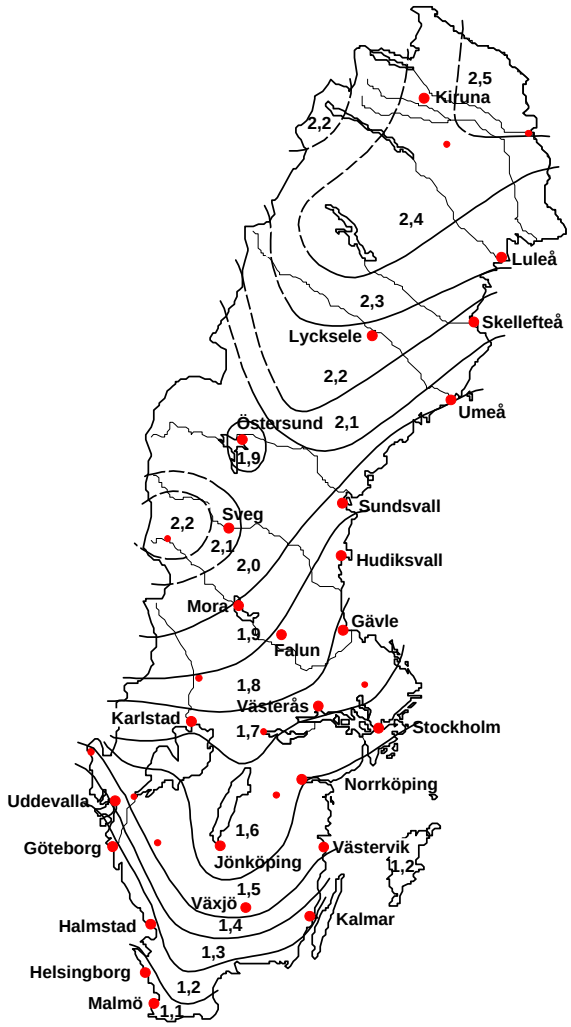

Figure 8.2/SE.1.1 - Map over Sweden with frostproof depths in mineral soil without snow on ground.

Clause National regulation

(ncpt) **SE.1.2 Partial factors for material strength**

For calculation of the design value of material strength the partial factor method is used with two partial factors γ_M and γ_n at the characteristic value of the material property. The method is in accordance with BFS 1998:39.

$$X_d = \frac{X_K}{\gamma_M \cdot \gamma_n}$$

The partial factor γ_n is depending on safety class. The safety class for overhead electrical transmission lines shall be Class 2 with γ_n = 1,1 in ultimate limit states and with γ_n = 1,0 in serviceability limit states.

SS-EN or SS-ENV Standard shall be used with the Swedish NAD(S).

NOTE BFS 1998:39 is the Swedish Building and Design Regulations.

8.3 SE.1 Soil investigation

(ncpt) If soil investigation is not performed the values in accordance with Table 8.3/SE.1 can be used. For soft soil the values have to be reduced.
Values for angle of internal friction, cohesion and frustum angle for overturning foundation shall be chosen according to tests or practice of the utility.

Other soil parameters shall be taken from references in [9] covering Swedish conditions.

Table 8.3/SE.1 - Specific weight of soil

Type of soil	Specific weight force		Frustum angle for uplift foundations[1)] degree
	naturally humid kN/m^3	with buoyancy kN/m^3	
Moraine, gravel, dense sand	18	11	20
Other non-cohesive soils	16	9	20
Clay	16	6	0
Loose clay	15	5	0
1) Minimum length 150 mm for the protruding part of the pad, see Figure 8.5.2/SE.2.			

8.4 SE.1 Loads acting on the foundations

(ncpt) For supports designed with the second order theory the reactions from this analysis shall be used.

8.5.2 SE.1 Geotechnical design by calculation

(ncpt) Geotechnical formulas shall be taken from SS-ENV 1997-1 + [9] including references covering the Swedish soil conditions.
The concrete specific weight forces against uplift and overturning are 23 kN/m^3 above ground water level and 13 kN/m^3 below.

Clause National regulation

Generally settlement do not have to be considered in non-cohesive soil. For cohesive soil and for soil filled up the risk of dangerous settlement should be considered. This is valid especially for foundations of supports that mainly shall carry one-sided loads, e.g. angle and terminal supports and also foundations for statically indeterminate structures that are sensitive to uneven settlements. The values given in clause 8/SE do not consider settlement.

The safety for uplift and overturning may be increased if not a careful soil investigation has been performed, especially for angle and terminal supports and if the support is sensitive to uneven settlements.

In back-filled soil the soil characteristics will not immediately be regained even at careful compacting. If the foundation will have large overturning or uplift loads before the back-fill is consolidated then this shall be considered in the calculation.

For rock foundations the anchor bolts shall be prevented from slip and the rock surface shall not be overloaded.

(ncpt) **SE.2 Uplift of mainly vertical loads**

The uplift resistance of foundations shall be at least γ_n / 1,1 times the design load calculated in ultimate limit states. For permanent tension loaded foundations for e.g. angle and terminal supports the resistance shall be at least γ_n times the design load. The resistance is the dead weight of foundation and soil. Depending on soil the resistance shall be calculated with maximum 20° frustum angle see Figure 8.5.2/SE.2. In soft soil the angle shall be reduced, in exceptional cases to 0°. Soil parameters in accordance with 8.3/SE.1.

If the back-fill is replaced by soil with higher specific weight force then the back-fill shall correspond to an inverted pyramid considering the applied frustum angle.

If the resistance is determined by test the lowest obtained value shall be selected. The conditions at the tests shall be in correspondence to the actual field conditions. The application of the load shall be slowly increased. The resistance load is the lowest value of:

- the load which results in a vertical displacement of 40 mm
- 1,2 times the load which results in a displacement of 10 mm.

For piles in tension γ_M shall be taken in accordance with the next 8.5.2/SE.3.

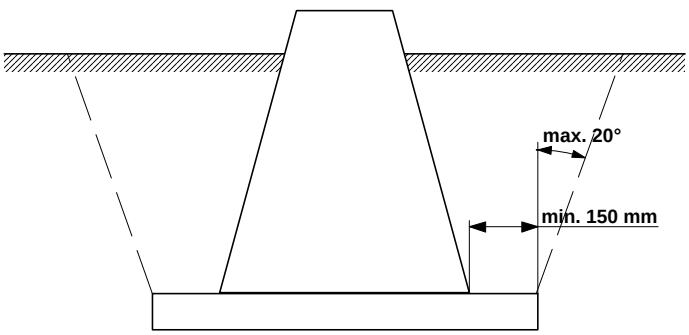

Figure 8.5.2/SE.2 - Uplift foundation

Clause National regulation

(ncpt) **SE.3 Compression, vertical and horizontal**

The compression resistance shall be calculated with partial factors γ_M and γ_n for the soil parameters and γ_{Rd} for the calculation formula.

$$\phi'_d = \arctan\left(\frac{\tan\phi'_k}{\gamma_M \cdot \gamma_n}\right)$$

$$c_{ud} = \frac{c_{uk}}{\gamma_M \cdot \gamma_n}$$

$$R_d = \frac{R(\phi'_d, c_{ud})}{\gamma_{Rd}}$$

where

ϕ' =angle of internal friction

c_u =shear strength

$R(\phi',c_u)$ =formula for calculation of resistance

Table 8.5.2/SE.3.1 - Partial factor γ_M in ultimate limit states

Soil parameter	γ_M
tan ϕ'_k	1,1 - 1,3
c_{uk}	1,2 - 2,0
other strength parameters	1,6 - 2,0
modules and settlement parameters	1,2 - 1,8

The interval for values of γ_M is depending on test methods and reliability of the soil characteristics. For favourable circumstances the lower values can be used. For piles γ_M can be reduced by 0 - 20 % if average soil parameter is used instead of a local value. Including this reduction γ_M shall not be lower than 1,05 for tan ϕ'_k, 1,2 for c_{uk} and 1,0 for other soil parameters.

In serviceability limit states γ_M is 90 % of the values used in ultimate limit states, but not less than 1,0.

The partial factor γ_{Rd} shall consider the uncertainty in the calculation model and assumptions. For the General Bearing Capacity Equation γ_{Rd} is 1,0 - 1,1 and for other equations γ_{Rd} is 1,2 - 2,0.

If the compression resistance is obtained by test the design value in ultimate limit states shall be the test value divided by $1{,}2 \cdot \gamma_n$.

The values in Figure 8.5.2/SE.3.1 and Figure 8.5.2/SE.3.2 can be used if the compression resistance is neither tested nor calculated with soil parameters. The curves are valid for load in undisturbed dry soil. For vertical loading the curve values shall be reduced when soil is filled for foundation or when ground water exist. For horizontal loading the curve values shall be considerably reduced when the soil, in the load direction, is disturbed, backfilled or when ground water exist. The soil is defined in Table 8.5.2/SE.3.2. In safety class 3 the design values in the figures shall be reduced by 10 %.

Clause National regulation

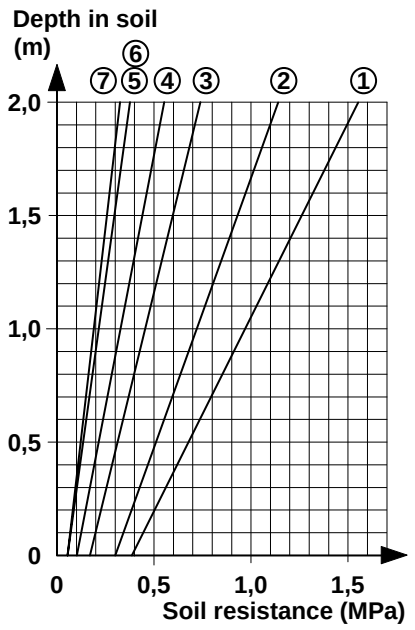

Figure 8.5.2/SE.3.1
Design value
of resistance in ultimate limit states for vertical loading in different soil types in safety class 2

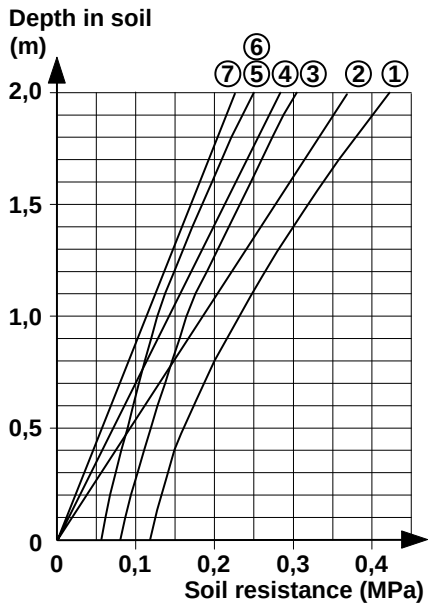

Figure 8.5.2/SE.3.2
Design value
of resistance in ultimate limit states for horizontal loading in different soil types in safety class 2

Table 8.5.2/SE.3.2 - Designation for soil types in Figures 8.5.2/SE.3.1, 8.5.2/SE.3.2, 8.5.3/SE.1.1.1 and 8.5.3/SE.1.1.2

Type of soil	Excavatability	Curve No.
Gravely sandy moraine	Hard	1
Sand and stony, multi-graded gravel	Hard	2
Fine-grained sandy moraine	Normal	3
Sand and shingle	Normal	4
Silty moraine	Soft	5
Clayey gravel	Soft	6
Clayey moraine	Soft	7
Silt, clayey sand and dry sandy gravely clay	Soft	8

(ncpt)

SE.4 Overturning

The overturning resistance of foundations shall be at least γ_n / 1,1 times the design load calculated in ultimate limit states. For self-supporting angle and terminal supports the resistance shall be at least γ_n / 0,9 times the design load. The overturning resistance shall be calculated with dead weight of foundation and soil. The soil parameters can be calculated with the partial factors γ_M = 1,0 and γ_n = 1,0. If the back-fill is replaced by soil with higher specific weight force then the back-fill shall correspond to an inverted pyramid considering the applied frustum angle.

For timber poles see 8.5.3/SE.1.

Clause National regulation

8.5.3 SE.1 Geotechnical design by prescriptive measures

(ncpt) Alteration of 8.5.3 for timber poles.

(ncpt) **SE.1.1 Timber poles**

A single or portal support of timber poles in firm or moderately firm ground generally do not need a special foundation. In soft soil reinforcement may be needed, e.g. back-filling around the pole with gravel or macadam or by sheet piling.

The embedded length of a self-supporting timber pole is depending on the pole diameter 2 m from butt and the soil type, see Figure 8.5.3/SE.1.1.1 for poles with blocking and Figure 8.5.3/SE.1.1.2 for poles without blocking. The soil is defined in Table 8.5.2/SE.3.2 and the ground water influence in Table 8.5.3/SE.1.1.

If the foundation design shall be in a higher safety class than the pole is designed for then the pole diameter shall be increased by 3 % at reading in Figure 8.5.3/SE.1.1.1 or Figure 8.5.3/SE.1.1.2.

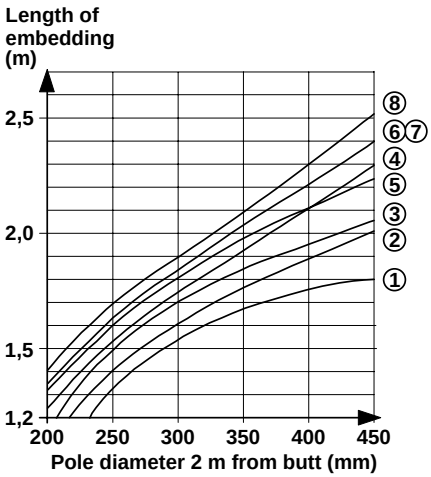

Figure 8.5.3/SE.1.1.1 Length of embedding for timber poles with upper and lower stone blocking in Safety Class 2

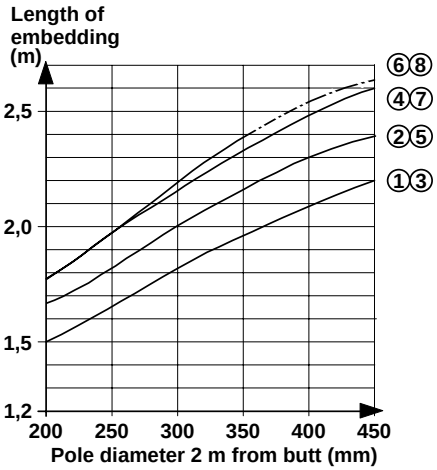

Figure 8.5.3/SE.1.1.2 Length of embedding for timber poles without stone blocking in Safety Class 2.

NOTE The line-dotted part of curve 6-8, in Figure 8.5.3/SE.1.1.2 is valid when it is back filled with coarse gravel or macadam.

Table 8.5.3/SE.1.1 - Increase of embedding length for timber poles at ground water in soi.

	Increase of length of embedding in metre at a ground water level of	
Foundation	**0 - 0,8 (m)**	**(0,8) - 1,6 (m)**
	under the ground level	
With blocking	0,3	0,1
Without blocking	0,2	0,1

Clause National regulation

8.6 SE.1 Loading tests

(ncpt) For structural test of foundations see 7.11 and 7.11/SE.1.

For rock eye-bolt the resistance shall be 1,40 · γ_n times the design value of load in ultimate limit states for tangent supports and 1,55 · γ_n times for permanent loaded guy, e.g. angle and terminal supports.

8.7 SE.1 Structural design

(ncpt) **SE.1.1 Concrete**

The material, design and construction shall be in accordance with the SS-ENV 1992-1-1 + [6] or with [1].

For concrete the quality class shall be minimum C25/30 in accordance with SS-ENV or minimum K30 in accordance with [1].

NOTE [1] is the Swedish regulations for concrete structures. The regulations contain of requirements for design in ultimate and serviceability limit states, design methods, design by testing, requirements for material, fabrication and control.

(ncpt) **SE.1.2 Steel**

The material, design and construction can be in accordance with SS-ENV 1993-1-1 + [7] or with [2]. For lattice steel see 7.3 and 7.3/SE.

The steel material shall effectively be protected against rust. The probability of corrosion is in general higher in soil than in air. In soil conditions the corrosion circumstances are considerably more complicated. If possible an investigation which characterise the soil in order to select the corrosion protection as hot-dip galvanising, asphalt or painting should be made.

A steel foundation located in soil corrodes in different extent in accordance with the soil condition. In well-drained sand or gravel or in soil with slight movement of ground water the corrosion exposure is low. It is enlarged with increasing humidity in soil and increased movement in the ground water. The exposure is also increased by the conductivity in the soil water. Higher content of dissolved salts gives increased conductivity with enlarged corrosion exposure. The corrosion is also increased with a more increased acid content in ground.

Hot-dip galvanising give a good corrosion protection in most of the soil types. In moderate aggressive soil well performed hot-dip galvanising is sufficient. In more aggressive soil additional protection is required, e.g. a thicker zinc coating, a layer of bitumen or an increase of member thickness in the order of some millimetre.

In frost-susceptible soil painted parts shall be avoided due to the risk of damage caused by frost heave.

Regarding corrosion protection, see 7.9 and 7.9/SE.

NOTE [2] is the Swedish regulations for steel structures. The regulations contain of requirements for design in ultimate and serviceability limit states, calculation methods, design by testing, requirements for material, fabrication, control and maintenance.

Clause National regulation

(ncpt) **SE.1.3 Timber**

The material, design and construction shall be in accordance with 7.5 and 7.5/SE.

Timber shall be impregnated if it is not placed in water or in soil with the ability to protect the timber against mouldering. Such case is clay, slime or mud which have pores complete filled with water and with such a consistence that air supply to timber is prevented.

8.8 SE.1 Construction and installation

(ncpt) At excavation for foundation the soil layer under the foundation may not be loosened up. If loosening can not be avoided then the soil layer shall be carefully compacted. If possible, the soil layers around the foundation shall not be loosened up.

9 Conductors and overhead earthwires (ground wires) with or without telecommunication circuits

9.2.1 SE.1 Characteristics and dimensions

(ncpt) Alteration

All aluminium conductors and aluminium conductors steel reinforced shall be in accordance with EN 50182 having dimensions in accordance with Annex G. All aluminium alloy conductors shall, for AlMgSi conductors be in accordance with SS 424 08 12 and for Al59-conductors be in accordance with SS 424 08 14.

The material for the AlMgSi conductors shall be in accordance with SS 424 08 11 and for the Al59-conductor in accordance with SS 424 08 13.

The minimum cross-section for the bare aluminium based conductors shall be 31 mm^2.

The size of conductor in reinforced line and demarcation span shall be at least in accordance with Table 9.2.1/SE.1.

Table 9.2.1/SE.1 - Minimum size of aluminium based conductor in reinforced line and demarcation span

Highest voltage for equipment kV	Minimum conductor area		
	Aluminium conductor steel reinforced mm^2	All aluminium alloy conductor mm^2	All aluminium conductor mm^2
≤ 55	62	99	157
(55) - 84	99	157	241
> 84[1)]	157	241	329
1) At highest voltage for equipment greater than 84 kV may greater areas be required with consideration to radio interference disturbance.			

9.2.3 SE.1 Conductor service temperatures and grease performance

(ncpt) Alteration

The maximum service temperature at normal line loading shall be 70°C.

The maximum short duration temperature for some day per year at different line loading above the normal level shall be 100°C.

The maximum temperature due to specified power system fault shall be 200°C.

Clause National regulation

9.2.4 SE.1 Mechanical requirements

(ncpt) Amendment

(ncpt) **SE.1.1 Design value of stress**

The design value of stress f_d for conductors in serviceability limit state, at load cases in accordance with 4.2.10.2/SE.4, Conductors, shall be less than or equal to:

- Copper conductors: 320 MPa
- All aluminium, all aluminium alloy, aluminium conductor steel reinforced or steel conductors: 55% of the RTS (rated tensile strength) in accordance with relevant conductor standard.

At calculation for conductors of all aluminium, all aluminium alloy, aluminium conductor steel reinforced, copper or steel the values given in Table 9.2.4/SE.1.1 shall be used. Alternatively, the modulus of elasticity obtained from tests in accordance with EN 50182 annex C and the creep elongation obtained from tests in accordance with SS 11 23 18 shall be used.

Table 9.2.4/SE.1.1 - Modulus of elasticity, elongation due to creep and expansion coefficient for conductors

Conductor type and stranding	Modulus of elasticity Initial, (before ice load) E_{iL}	Modulus of elasticity Final, (after ice load) E_p	Highest stress σ_p at which given value of E_{iL} is valid	Permanent elongation due to creep Factor x	Permanent elongation due to creep ε_c	Permanent elongation due to creep correspond to a rise temperature	Expansion coefficient
	MPa	MPa	MPa		‰	°C	10^{-6}/°C
All aluminium							
7 wires	47 000	61 000	60	280	0,8	35	23
19 wires	45 000	60 000	60	280	0,8	35	23
37 wires	43 000	58 000	60	280	0,8	35	23
61 wires	40 000	56 000	60	280	0,8	35	23
All aluminium alloy							
7 wires	65 000	67 000	100	140	0,4	17	23
19 wires	61 000	64 000	100	140	0,4	17	23
37 wires	57 000	62 000	100	140	0,4	17	23
61 wires	53 000	60 000	100	140	0,4	17	23
Aluminium conductor steel reinforced							
1 + 6 wires	59 000	80 000	135	145	0,3	16	19
7 + 12 wires	91 000	105 000	170	75	0,2	13	15
7 + 26 wires	60 000	76 000	120	160	0,4	21	19
7 + 32 wires	74 000	83 000	150	80	0,3	17	18
7 + 42 wires	47 000	60 000	100	145	0,5	24	21
7 + 54 wires	52 000	72 000	120	90	0,4	21	19
19 + 54 wires	51 000	71 000	120	85	0,4	21	19
Copper, All stranding	100 000	116 000	200	166	0	0	17
Steel, All stranding							
600 MPa	163 000	180 000	330	-	0	0	11
1400 MPa	180 000	180 000	770	-	0	0	11

Clause National regulation

NOTE The modulus of elasticity for conductors of all aluminium, all aluminium alloys and aluminium conductor steel reinforced will vary at loading within the entire stress-strain region. An increased load give a permanent elongation ε_s in the conductor, see Figure 9.2.4/SE.1.1. This elongation depends partly on the material characteristics of aluminium and theirs alloys and partly on the settlement of the wires in the conductor. The settlement will also occur in conductors of copper or mild, 600 MPa, steel.

The elongation has been taken into consideration at the determination of the modulus of elasticity E_i.

In spite of above-mentioned variation in modulus of elasticity the conductors can be calculated with sufficient accuracy by using a constant value of E_i, in Table 9.2.4/SE.1.1 designated E_{iL}.

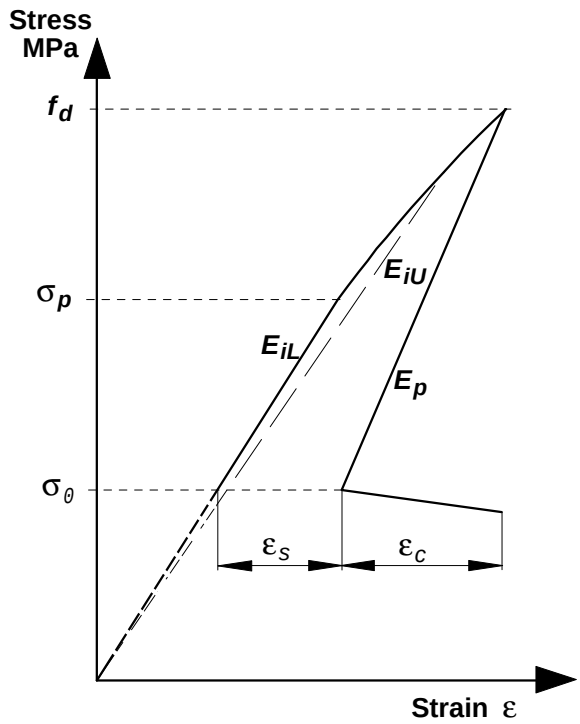

Figure 9.2.4/SE.1.1 - Stress – strain

The initial modulus of elasticity E_{iL} in accordance with Table 9.2.4/SE.1.1 shall be used at stress levels equal to or lower than σ_p given in Table 9.2.4/SE.1.1.

The modulus of elasticity E_{iU}, determined in accordance with the formula

$$E_{iU} = E_{iL} - x(\sigma - \sigma_p)$$

shall be used at stress levels higher than σ_p given in Table 9.2.4/SE.1.1. The modulus of elasticity E_{iL} and the factor x shall be taken from Table 9.2.4/SE.1.1.

NOTE In the formula σ refer to the highest stress in MPa without any regard to creep.

The final modulus of elasticity after ice load on the conductor, E_f, shall be assumed to have a constant value in accordance with Table 9.2.4/SE.1.1. This value shall be used at stress relieving (unloading) as well at reloading.

The increased conductor sag due to creep shall be calculated by using the value of ε_c or by using the corresponding rise temperature in accordance with Table 9.2.4/SE.1.1.

NOTE Conductors, containing aluminium or aluminium alloy, will by time gain a permanent elongation ε_k due to creep in the metal, see Figure 9.2.4/SE.1.1. The creep will increase by increased stress and temperature respectively. At constant stress and temperature the creep proceed with decreased velocity over time.

Clause National regulation

The conductor sag shall, since the creep continue successively during a long time, be calculated for the following two load cases:

- The conductor sag shall, since the creep continue successively during a long time, be calculated for the following two load cases:

- Final stage and after conductor creep

The clearance distances and acting loads on the supports shall be calculated at the most unfavourable values of sags and loads.

9.2.5 SE.1 Corrosion protection

(ncpt) Amendment

The grease shall not affect the material of the conductor. The required penetrability is 325 and the temperature range is: Θ_1 = -20 °C, Θ_2 = 225 °C.

9.2.6 SE.1 Test requirements

(ncpt) Amendment

The AlMgSi conductors shall be tested in accordance with SS 424 08 12.

The Al59 conductors shall be tested in accordance with SS 424 08 14.

9.3.1 SE.1 Characteristics and dimensions

(ncpt) Amendment

The minimum cross-section for the steel conductors and earth wires shall be 25 mm^2.

The size of conductor in reinforced line and demarcation span shall be at least in accordance with Table 9.3.1/SE.1.

Table 9.3.1/SE.1 - Minimum size of steel conductor in reinforced line and demarcation span

Highest voltage for equipment kV	Minimum conductor area mm^2
≤ 55	33
(55) - 84	33
> 84[1)]	52[2)]

1) At highest voltage for equipment greater than 84 kV may greater areas be required with consideration to radio interference disturbance.

2) In separation structure may 33 mm^2 be used

9.3.3 SE.1 Conductor service temperatures and grease characteristics

(ncpt) Amendment

The maximum temperature due to specified power system fault shall be 300°C.

9.3.4 SE.1 Mechanical requirements

(ncpt) Amendment

See 9.2.4/SE.1.1, Design value of stress for aluminium based conductors.

Clause National regulation

9.4 SE.1 Copper based conductors

(ncpt) Amendment

(ncpt) SE.1.1 Characteristics and dimensions

The minimum cross-section for the copper conductors shall be 16 mm^2.

The size of conductor in reinforced line and demarcation span shall be at least in accordance with Table 9.4/SE.1.1.

Table 9.4/SE.1.1 - Minimum size of copper conductor in reinforced line and demarcation span

Highest voltage for equipment kV	Minimum conductor area mm^2
≤ 55	35
(55) - 84	50
> 84[1)]	120
1) At highest voltage for equipment greater than 84 kV may greater areas be required with consideration to radio interference disturbance.	

(ncpt) SE.1.2 Conductor service temperatures

The maximum service temperature at normal line loading shall be 50°C.

The maximum short duration temperature for some day per year at different line loading above the normal level shall be 70°C.

The maximum temperature due to specified power system fault shall be 150°C.

(ncpt) SE.1.3 Mechanical requirements

See 9.2.4/SE.1.1, Design value of stress for aluminium based conductors.

9.5.1 SE.1 Characteristics and dimensions

(ncpt) Amendment

The minimum cross-section for the conductors shall be 62 mm^2.

9.5.3 SE.1 Conductor service temperatures

(ncpt) Amendment

The maximum service temperature at normal line loading shall be 70°C.

The maximum short duration temperature for some day per year at different line loading above the normal level shall be 100°C.

The maximum temperature due to specified power system fault shall be 200°C.

9.5.4 SE.1 Mechanical requirements

(ncpt) Amendment

See 9.2.4/SE.1.1, Design value of stress for aluminium based conductors.

9.6.2 SE.1 Partial factor for conductor

(ncpt) Amendment

See 9.2.4/SE.1.

Clause National regulation

9.8 SE.1 Selection, delivery and installation of conductors

(ncpt) Amendment

(ncpt) SE.1.1 Reinforced line

Re-use of conductor is not allowed in reinforced line or demarcation span without carefully examination of the used conductor. All damaged parts shall be scraped.

Joint shall not be installed in demarcation span. Compressed dead end clamp with jumper terminal is equal with joint in this case. Joint should be avoided in the crossing and the spans in the adjacent of the crossing span. Joint in such span shall be protected for oxidising and corrosion as will reduce the electrical and mechanical behaviour.

(ncpt) SE.1.2 Crossing

Conductor shall be attached to the insulator/ insulator set in that way no danger situation will arise in the crossing in that case a conductor failure will occur in the vicinity outside the terminal support or demarcation span. Furthermore shall no damage occur at the insulator or the fitting, i.e. conductor clamps. These requirements shall be fulfilled at the highest load in the conductor for which the support is designed. If parallel insulators are used the requirement is valid for when only one insulator is functioning.

Joint in crossing with greater traffic roads and the adjacent span should in addition be reinforced both electrically and mechanically. Dead end clamp with through conductor is equal to such joint.

10 Insulators

10.2 SE.1 Standard electrical requirements

(ncpt) Amendment

Stay insulator used in system with isolated neutral or resonant earthing shall meet the following requirements for wet power frequency withstand voltage:

- the highest voltage for equipment when the insulator shall be used at a highest voltage for equipment greater than 15 kV

10.7 SE.1 Mechanical requirements

(ncpt) Amendment

(ncpt) SE.1.1 Dimensioning load

The design value of actions E_d in serviceability limit state, at load cases in accordance with clause 4, shall be less than or equal to the design resistance R_d for insulators. The design resistance R_d is:

$$R_d = \frac{F_{uk}}{\gamma_m}$$

where

F_{uk} is:

- Specified mechanical failing load (MFL) for string insulator units, for stay insulators and for bobbin insulators
- Specified mechanical load (SML) for composite string insulator units
- Specified cantilever failing load for pin and line post insulators

Clause National regulation

γ_m is:

- Porcelain or glass string insulator unit $\gamma_m = 2,5$
- Composite string insulator unit and stay insulator $\gamma_m = 2,5$
- Line post insulator $\gamma_m = 2,0$

10.16 SE.1 Selection, delivery and installation of insulators

(ncpt) Amendment

(ncpt) SE.1.1 Crossing

Transposition insulator sets is not allowed in crossings.

(ncpt) SE.1.2 Crossing with reinforced span

Insulator in crossing support shall fulfil the following requirements:

- Line-post insulator shall be arranged in that way that the insulator, at conductor failure, will not bend in the attachment point more than that temporary operational service can be maintained.
- Insulator set consisting of two or more insulator strings shall be arranged in that way the strength will considerable be reduced if failure will occur in one string.

11 Line equipment - overhead line fittings

11.1 General

(ncpt) Amendment

The test requirements for vibration dampers and spacers shall be given in the project specification.

NOTE Sweden is not in favour of EN 61854 and EN 61897 until the outcome of the Cigré studies has been implemented.

11.2.2 SE.1 Requirement applicable to current carrying fittings

(ncpt) Amendment

Conductor joint, tension clamp and jumper clamp shall have greater current carrying capability than the conductor itself. These requirements shall also be fulfilled after a short circuit current equal to the rated short circuit current for the conductor but for maximum 50 kA-1 second.

The voltage drop across the current carrying connector shall not be greater than 55% of the voltage drop across equivalent length of conductor.

11.6 SE.1 Mechanical requirements

(ncpt) Amendment

(ncpt) SE.1.1 Dimensioning load

The design value of actions E_d shall be in accordance with 4.2.11/SE.1.

The stresses shall not exceed the design value of stress f_d for the material in accordance with clause 7 and 7/SE.

Clause National regulation

Alternatively the mechanical strength may be determined by test at which the following two criteria shall be fulfilled:

- Permanent deformation by tension-, compression-, bending- and shearing load shall not occur in fittings made of steel or aluminium alloy at a load corresponding to 1,1 times R_d.

- Failing load F_u shall exceed $F_k = \frac{R_d \cdot \gamma_m \cdot \gamma_n}{1{,}1}$ for fittings tested statistical in accordance with IEC 60591.

where

R_d = The design value of resistance in serviceability limit state

γ_m = shall be in accordance with 10.7/SE.1.1. At test on separate samples γ_m shall be increased by 10%

γ_n = 1,1

(ncpt) **SE.2 Mechanical failing load for joint, tension clamp and jumper clamp**

The mechanical failing load shall be at least 90% of the failing load, obtained at test, of the conductor.

11.7 SE.1 Durability requirements

(ncpt) Hot dip galvanising of insulator fittings shall be in accordance with SS-EN ISO 1461.

11.14 SE.1 Selection, delivery and installation of fittings

(ncpt) Normative amendment

(ncpt) **SE.1.1 Protective measures for transmission lines**

Transmission lines shall withstand the short circuit current at the cut-off time as is valid for the line. The short circuit reliability will be achieved if insulator, fittings and conductor either will withstand or will be protected for damage. This will be fulfilled by the following measures:

- Insulator shall have sufficient puncture capability
- Fittings shall have sufficient ability to carry the current
- Conductor clamp shall have sufficient ability to carry the current
- Installation of arcing protection devices as shall catch and guide the arc away from the insulator string, fittings and conductor
- Reduction of the cut-off time

(ncpt) **SE.1.2 Suspension insulator sets**

Arcing protection devices give sufficient protection of insulator string and the device at the energised side is considered to give sufficient protection of the conductor in the vicinity of the conductor clamp

(ncpt) **SE.1.3 Tension and transposition insulator sets**

Arcing protection devices give sufficient protection of insulator string.

Clause National regulation

(ncpt) **SE.1.4 Line-post insulators**

Line-post insulators in accordance with SS 424 05 21 is considered to withstand power arc flashover at fault currents and cut-off times given in Figure 11.14/SE.1.4. One or the other of top-clamp, hand-tie in accordance with SS 424 12 50 or preformed tie in accordance with SS 424 12 51 is considered to give enough protection to the conductor within the same conditions.

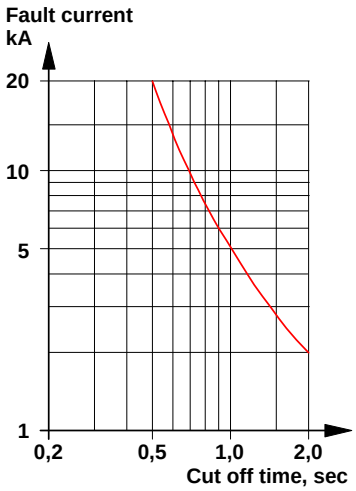

Figure 11.14/SE.1.4 - Graph of safe border line for line-post insulators

(ncpt) **SE.2 Reinforced line**

See 11.14/SE.1.1.

(ncpt) **SE.3 Joint, tension clamp and jumper clamp**

Conductor joint, tension clamp and jumper clamp shall be performing in such a way that the conductor will be unaffected.

Solder joint shall not be used.

12 Quality assurance, Checks and taking-over

12.2 Checks and taking-over

(A-dev) Permission for taking a high voltage transmission line in service have to be requested at the Swedish National Electrical Safety Board in accordance with SFS 1957:601 Chapter 12, second paragraph.

Annex E

E.2 SE.1 Insulation co-ordination

(ncpt) Required withstand voltages and electrical clearance distances shall be in accordance with 5.3/SE.1

Annex G

G.2 SE.1 Minimum dimension of earth electrode materials

(A-dev.) Minimum dimensions and cross-sections of earth electrodes from different materials shall be in accordance with 6.2.2.1/SE.1

Annex J

J SE.1 Lattice steel towers

(ncpt) If the alternative [2] is used instead of SS-ENV 1993-1-1 then only J.6, J.7 and J.10 in Annex J shall be considered.

Clause National regulation

J.5.1.1 SE.1 Flexural buckling

(ncpt) Paragraph (a) for full scale loading tests:
The buckling curve "b" shall only be used for hot-dip galvanised, hot-rolled, 90° angle bars. For other types of members see SS-ENV 1993-1-1.

(ncpt) **SE.2 Initial crookedness (Chapter 7.7.4)**

If the initial crookedness is larger than 0,001 L, then the difference, actual crookedness minus 0,001 L, shall be considered in the buckling calculation. For hollow cross section the limit is 0,002 L.

J.6.2.2 SE.1 Single members

(ncpt) Alteration of boxed values:

Angle with staggered bracing (d) $\lambda = 1{,}10 \cdot L / i_{yy}$ in self-supporting support.
Angle with staggered bracing (d) $\lambda = 1{,}25 \cdot L / i_{yy}$ in guyed support.

J.6.3.1 SE.1 General

(ncpt)

(ncpt) **SE.1.1 Alteration in (2):**

... and secondary bracing limited to 250.

(ncpt) **SE.1.2 Amendment**

For an angle bar connected in only one flange the effective slenderness ratio $\bar{\lambda}_{eff}$ shall be calculated as follows:

$$\bar{\lambda}_{eff} = 0{,}60 + 0{,}57 \cdot \bar{\lambda} \qquad \text{for } \bar{\lambda} < 1{,}4$$

$$\bar{\lambda}_{eff} = \bar{\lambda} \qquad \text{for } \bar{\lambda} \geq 1{,}4$$

If the alternative [2] is used then $\bar{\lambda} = \lambda_c$ in [2], else $\bar{\lambda}$ is calculated according to Annex J.

J.8 SE.1 Calculation of effective slenderness

(ncpt) This clause shall not be used, if not otherwise stated in the Project Specification.

J.9 SE.1 Selection of buckling cases for angles

(ncpt) This clause shall not be used, if not otherwise stated in the Project Specification.

Annex K

K.6 SE.1 Design of holding-down bolts - Table K.2

(ncpt) Alteration of γ in Table K.2

$\gamma_c = \gamma_{MC} \cdot \gamma_n$

γ_{MC} for concrete shall be taken from [6].

γ_{Mb} in accordance with 7.4.6.1/SE.1.

The tension and compression forces shall be combined with shear and bending forces in the bolt, depending on detail design.

Annex M

M SE.1 Typical values of the geotechnical parameters of soils and rocks

(ncpt) Geotechnical parameters shall be chosen in accordance with 8.3/SE.1.

National Normative Aspects (NNA)

for

the CZECH REPUBLIC

based on EN 50341-1:2001

Version circulated with corrigendum April 2006.

Contents

			page
	Foreword		**10**
1	**General scope – Field of application**		**11**
	CZ.1	Field of application	11
	CZ.2	Power lines with insulated conductors	11
	CZ.3	Conductors and cables for telecommunication purposes	11
	CZ.4	Installation of telecommunication equipment on supports	11
2	**Definitions, symbols and references**		**12**
2.1	CZ.1	Definitions	12
2.2	CZ.1	List of symbols	13
2.3	References		
	CZ.1	General	15
	CZ.2	National laws government decrees and other binding rules of law	15
	CZ.3	Standards	15
3	**Basis of design**		**17**
3.1	CZ.1	General	17
3.2	Requirements		
3.2.2	CZ.1	Reliability of overhead lines	17
3.2.3	CZ.1	Security requirements	17
3.2.5	CZ.1	Co-ordination of strength	17
3.2.6	CZ.1	Additional considerations	18
3.2.7	CZ.1	Design working life	18
3.3	Limit states		
3.3.3	CZ.1	Serviceability limit states	18
4	**Actions on lines**		**18**
4.2	Actions, General approach		
4.2.1	Permanent loads		
	CZ.1	Self-weight of conductors	18
4.2.2	Wind loads		
4.2.2.1	Wind speeds		
4.2.2.1.2	Mean wind speed V_{mean}		
	CZ.1	Basic reference wind speed $V_{mean,0}$ and mean wind speed V_{mean}	18
4.2.2.1.5	CZ.1	Reference wind speed V_R	19
4.2.2.2	Dynamic wind pressure q_h		
	CZ.1	Air density	19
4.2.2.4	Wind forces on overhead line components		
4.2.2.4.1	Wind forces on conductors		
	CZ.1	Wind force on conductor, acting on the support at the attachment point of insulator set	19
	CZ.2	Drag factors for conductors	22
	CZ.3	Height of conductors above ground	22
	CZ.4	Unit wind load on conductor	22
4.2.2.4.3	Wind forces on lattice towers		
	CZ.1	Drag factors	23
4.2.3	Ice loads		
4.2.3.1	CZ.1	General	23
4.2.3.2	Characteristic ice load		
	CZ.1	Reference, characteristic, and design ice loads on conductors	24

4.2.3.3 CZ.1 Ice forces on conductors 24
4.2.4 Combined wind and ice loads
4.2.4.1 Combined probabilities
CZ.1 Combinations of loads, combination factors for wind loads 25
4.2.4.2 CZ.1 Drag factors and ice densities 26
4.2.4.3 CZ.1 Dynamic wind pressure 26
4.2.4.4 CZ.1 Equivalent diameter *D* of ice covered conductor 26
4.2.4.5 Wind forces on supports from ice covered conductors
CZ.1 Wind force on ice covered conductor, acting on the support at the attachment point of insulator set 26
CZ.2 Unit wind load on ice covered conductor 27
4.2.5 Temperature effects
CZ.1 Design situations for verification at limit states and associated temperatures 27
CZ.2 Reference temperature 28
4.2.6 Construction and maintenance loads
4.2.6.1 General
CZ.1 General 28
CZ.2 Erection of supports 28
CZ.3 Stringing and sagging of conductors
CZ.3.1 Conductor tensions 28
CZ.3.2 Vertical forces 28
CZ.3.3 Transverse forces 29
CZ.3.4 Longitudinal and vertical forces acting on temporary terminal (dead-end) supports during stringing of conductors 29
CZ.3.5 Longitudinal forces acting on supports with conductors in stringing sheaves 29
CZ.4 Vertical maintenance loads 29
4.2.6.2 CZ.1 Loads related to the weight of linesmen 29
4.2.7 Security loads
CZ.1 Torsional loads 30
CZ.2 Longitudinal bending loads 30
CZ.3 Longitudinal bending loads for section supports 30
CZ.4 Mechanical conditions of application 31
CZ.5 Supplementary security measures
CZ.5.1 General 32
CZ.5.2 Supplementary security measure in ice zones with very heavy ice loads 33
CZ.6 Alternative security measures
CZ.6.1 Torsional loads 33
CZ.6.2 Longitudinal bending loads 33
CZ.7 Security loads relating to failure of one string of multiple insulator set 33
4.2.8 CZ.1 Forces due to short-circuit currents 34
4.2.9 Other special forces
CZ.1 Avalanches, creeping snow and earthquakes 34
4.2.10 Load cases
4.2.10.1 General
CZ.1 Classification of supports according to their purposes 34
CZ.2 Combinations of loads for junction support 35
CZ.3 Combinations of loads for Y–branch support 35
CZ.4 Combinations loads for section support in front of a substation 35
CZ.5 Special load case 35
4.2.10.2 Standard load cases
CZ.1 Standard load cases 36
CZ.2 Subsections (a) to (e), relating to Table 4.2.7 36
CZ.3 Load cases for serviceability limit states 37
4.2.11 Partial factors for actions
CZ.1 Partial factors for actions for ultimate limit states 37
CZ.2 Load factors for serviceability limit states 39
CZ.3 Partial factors for actions for design working life other than 50 years 39

CZ.4 Double and multi-circuit lines, used temporarily with incomplete number of installed circuits 39
CZ.5 Loads on components, temporarily fulfilling other functions 39

5 Electrical requirements 40

5.2 Currents
5.2.1 Normal current
CZ.1 Conditions for calculation of design maximum conductor temperature 40
5.3 Insulation co-ordination
5.3.3 Determination of the co-ordination withstand voltage
5.3.3.5 Lightning performance of overhead lines
CZ.1 Protection against atmospheric overvoltage 40
5.3.4 Determination of the required withstand voltage (U_{rw})
CZ.1 Required withstand voltages 40
CZ.2 Required withstand voltages of insulator sets 40
5.3.5 Electrical clearance distances to avoid flashover
5.3.5.1 General
CZ.1 Method to determine minimum air clearances 41
5.3.5.3 Empirical method
CZ.1 Minimum clearances D_{el} and D_{pp} 41
CZ.2 Minimum clearances at power frequency voltage 42
5.4 Internal and external clearances
5.4.1 Introduction
CZ.1 Clearances of insulated conductors 42
CZ.2 Clearances to self-supporting dielectric cables 42
CZ.3 Clearances for circuits up to 45 kV on combined lines 42
CZ.4 Requirement to maintain clearances for the working life of a line 42
5.4.2 General considerations and load cases
5.4.2.1 General considerations and underlying principles
CZ.1 Check of a_{som} 43
5.4.2.2 Load cases for calculation of clearances
5.4.2.2.1 Maximum conductor temperature
CZ.1 Design maximum temperature of phase conductors 43
CZ.2 Design maximum temperature of earth wires 44
CZ.3 Line with more circuits 44
CZ.4 Crossings of overhead power lines 44
5.4.2.2.2 Ice load for determination of electrical clearances
CZ.1 Load case Ice load 44
CZ.2 Load case Non-uniform ice load 44
5.4.2.2.3 Wind load for determination of electrical clearances
CZ.1 Load case Wind load (except extreme wind load) 45
CZ.2 Load case Unequal wind loads 45
CZ.3 Load case Extreme wind load 45
CZ.4 Load case Mild wind load 45
CZ.5 Load case Minimum conductor temperature 46
5.4.2.2.4 Combined wind and ice loads
CZ.1 Load case Combined wind and ice load 46
CZ.2 Load case Combined ice and unequal wind loads 46
5.4.3 Clearances within the span and at the tower
CZ.1 Reduction factor for minimum internal clearances 46
CZ.2 Other load cases for clearances within the span and at the support 47
CZ.3 Clearances between conductors within the span under non-uniform ice load conditions 47
CZ.4 Verification of minimum clearances between conductors within the span according to the empirical relation 47

5.4.4 Clearances to ground in areas remote from buildings, roads, railways and navigable waterways
CZ.1 Clearances under combined wind and ice load conditions 49
CZ.2 Conditions for growing of stands 49
CZ.3 Restriction for heights of trees 49
5.4.5 Clearances to buildings, traffic routes, other lines and recreational areas
5.4.5.1 General
CZ.1 Line crossing roads or adjacent to roads 49
CZ.2 Line crossing railways or adjacent to railways 49
CZ.3 Line crossing navigable waterways or adjacent to navigable waterways 49
CZ.4 Line protection zone 49
CZ.5 Other load cases for minimum clearances to buildings, roads, other lines and recreational areas 50
CZ.6 Application of double and multiple insulator sets 50
CZ.7 Mid-span conductor joints 50
5.4.5.2 Residential and other buildings
CZ.1 Non-uniform ice load conditions 50
CZ.2 Minimum clearance to structure when falling towards line conductors 50
CZ.3 Restrictions in the line protection zone 50
CZ.4 Buildings and structures in the line protection zone with a line owner's approval 50
CZ.5 Fire resistance 51
5.4.5.3 Traffic routes
CZ.1 Contacts of power lines with roads 51
CZ.2 Other requirements for contacts of power lines with roads 51
CZ.3 Additional requirements for contacts of power lines with motorways and speedways
CZ.3.1 Clearance of the support to motorways or speedways 51
CZ.3.2 Lay-out 51
CZ.4 Minimum clearances of conductors to local and special-purpose roads 51
CZ.5 Building in railway protection zone 51
CZ.6 Additional requirements for crossing railway 51
CZ.7 Clearances to waterways significant in terms of shipping transport 51
CZ.8 Clearances to other waterways and water areas 52
CZ.9 Crossing over permanent ski lifts 52
5.4.5.4 Other power lines and overhead telecommunication lines
CZ.1 Minimum clearances to other overhead power lines and overhead telecommunication lines 52
CZ.2 Parallel lines 52
5.5 Corona effect
5.5.1 Radio noise
5.5.1.3 Noise limits
CZ.1 Maximum permissible levels of radio noise 53
5.6 Electric and magnetic fields
5.6.1 Electric and magnetic fields under a line
CZ.1 Limit values for power frequency electric and magnetic field strength in general 53
CZ.2 Limit values for power frequency electric and magnetic field strength near overhead line 53
5.6.2 Electric and magnetic field induction
CZ.1 Effects upon steel pipelines 53
CZ.2 Effects on interlocking circuits and plants of railways 54
CZ.3 Earthing of items near overhead line 54
5.6.3 Interference with telecommunication circuits
CZ.1 Protection of telecommunication lines 54

6 Earthing systems 54

6.2 Dimensioning of earthing systems at power frequency

6.2.1 General
CZ.1 Data for dimensioning of earthing systems 54

6.2.2 Dimensioning with respect to corrosion and mechanical strength

6.2.2.2 Earthing and bonding conductors
CZ.1 Application of aluminium and aluminium alloys 54

6.2.4 Dimensioning with regard to human safety

6.2.4.1 CZ.1 Permissible values 54

6.2.4.2 Measures for the observance of permissible touch voltage
CZ.1 Support surroundings rarely occupied by people 55
CZ.2 Immediate automatic disconnection of supply 55
CZ.3 Protective measures 55
CZ.4 Combined lines 55

6.3 Construction of earthing systems

6.3.2 Transferred potentials
CZ.1 Protection of equipment against dangerous effects 55

6.4 Earthing measures against lightning effects
CZ.1 Prevention from backflashovers 55

7 Supports 56

7.3 Lattice steel towers

7.3.4 CZ.1 Serviceability limit states 56

7.3.5 Ultimate limit states

7.3.5.1 Basis

7.3.5.1.1 CZ.1 General 57

7.3.6 Connections

7.3.6.1 Basis

7.3.6.1.1 CZ.1 General 57

7.3.6.2 CZ.1 Connection with bolts 57

7.4 Steel poles

7.4.4 CZ.1 Serviceability limit states 57

7.4.5 Ultimate limit states

7.4.5.1 CZ.1 Basis 58

7.4.6 Connections

7.4.6.1 CZ.1 Basis 58

7.4.6.3 CZ.1 Slip joint connections 58

7.9 Corrosion protection and finishes

7.9.1 General
CZ.1 Methods of corrosion protection 58
CZ.2 Corrosion protection by painting 58

7.9.4 CZ.1 Paint over galvanising 58

7.9.5 CZ.1 Decorative finishes 59

7.10 Maintenance facilities

7.10.1 CZ.1 Climbing 59

7.10.2 CZ.1 Maintainability 59

7.10.3 Safety requirements
CZ.1 Safety warning signs 59
CZ.2 Prevention of unauthorised climbing 60
CZ.3 Support numbering 60
CZ.4 Circuit identification markings 60
CZ.5 Attachment of earthing conductors 61

8 Foundations 61

8.2 CZ.1 General requirements 61
8.3 CZ.1 Soil investigation 61
8.4 CZ.1 Loads acting on foundations 61
8.5 Geotechnical design
8.5.1 CZ.1 General 61
8.5.2 Geotechnical design by calculation
8.5.2.1 General design formula
CZ.1 Foundation resistance 61
CZ.2 Stability of the support 62
8.7 CZ.1 Structural design 62
8.8 CZ.1 Construction and installation 62

9 Conductors and overhead earthwires (ground wires) with or without telecommunication circuits 62

9.1 Introduction
CZ.1 Insulated conductors 62
CZ.2 All dielectric self-supporting optical cables (ADSS) 62
9.2 Aluminium based conductors
9.2.1 Characteristics and dimensions
CZ.1 Conductor specification 62
9.2.2 Electrical requirements
CZ.1 Determination of DC resistance of the conductor 63
CZ.2 Calculation of AC resistance of the conductor at power frequency 63
9.2.3 Conductor service temperatures and grease characteristics
CZ.1 Maximum permissible temperatures of conductors 63
CZ.2 Maximum permissible temperatures of special conductors 63
CZ.3 Properties of grease 63
9.2.4 Mechanical requirements
CZ.1 Limit states 64
CZ.2 Protection against damage due to wind induced vibrations 64
9.2.5 Corrosion protection
CZ.1 Conductor greasing 66
9.2.6 Test requirements
CZ.1 Special tests 66
CZ.2 Tests of stranded conductors according to other standards 66
9.3 Steel based conductors
9.3.1 Characteristics and dimensions
CZ.1 Specification of conductor 66
9.3.2 Electrical requirements
CZ.1 Determination of DC resistance of the conductor 66
CZ.2 Calculation of AC resistance of the conductor at power frequency 66
9.3.3 Conductor service temperatures and grease characteristics
CZ.1 Maximum permissible temperatures of conductors 66
CZ.2 Maximum permissible temperatures of special conductors 67
CZ.3 Properties of grease 67
9.3.4 Mechanical requirements
CZ.1 Limit states 67
CZ.2 Protection against damage due to wind induced vibrations 67
9.3.5 Corrosion protection
CZ.1 Conductor greasing 68
9.3.6 Test requirements
CZ.1 Special tests 68
CZ.2 Tests of stranded conductors according to other standards 68

9.4 Copper based conductors
CZ.1 Requirements 68

9.5 Conductors (OPCON´s) and ground wires (OPWG´s) containing optical fibre telecommunication circuits

9.5.1 Characteristics and dimensions
CZ.1 Conductor specification 68

9.5.2 Electrical requirements
CZ.1 Determination of DC resistance of the conductor 68
CZ.2 Calculation of AC resistance of the conductor at power frequency 68

9.5.3 Conductor service temperature
CZ.1 Maximum permissible temperatures of conductors 68
CZ.2 Maximum permissible temperatures of special conductors 69
CZ.3 Properties of grease 69

9.5.4 Mechanical requirements
CZ.1 Limit states 69
CZ.2 Protection against damage due to wind induced vibrations 69

9.5.5 Corrosion protection
CZ.1 Conductor greasing 70

9.6 General requirements
CZ.1 Partial safety factor for conductors 70
CZ.2 Conductor splicing 70

9.7 Test reports and certificates
CZ.1 Scope of tests 70

10 Insulators 70

10.1 General
CZ.1 Application of multiple insulator sets 70

10.2 Standard electrical requirements
CZ.1 Withstand voltages of insulator sets 71
CZ.2 Application of protective fittings 71
CZ.3 Direction of insulator set protective fittings 71

10.3 RIV requirements and corona extinction voltage
CZ.1 Requirements for radio noise 71

10.4 Pollution performance requirements
CZ.1 Selection of insulators for polluted environment 72

10.5 Power arc requirements
CZ.1 Short-circuit resistance 72

10.7 Mechanical requirements
CZ.1 Partial factors for a material property for insulators
CZ.1.1 Ultimate limit states 73
CZ.1.2 Serviceability limit states 73
CZ.2 Minimum permissible load on insulator sets 73
CZ.3 Multiple insulator sets 73

10.11 Type test requirements

10.11.1 Standard type tests
CZ.1 Type tests of composite insulators 73
CZ.2 Type tests of insulator sets 73
CZ.3 Dynamic tests of tension insulator sets 74

10.11.2 CZ.1 Optional type tests 74

11 Line equipment – Overhead line fittings 75

11.1 CZ.1 General 75

11.3 CZ.1 RIV requirements and corona extinction voltage 75

11.5 Short-circuit current and power arc requirements
CZ.1 Insulator set fittings 75

11.6 Mechanical requirements
CZ.1 Partial factors for a material property for fittings
CZ.1.1 Ultimate limit states 75
CZ.1.2 Serviceability limit states 75
CZ.2 Fittings of multiple insulator sets 76
CZ.3 Tension clamps, dead-end tension joints and mid-span tension joints 76
CZ.4 Additional requirements for suspension clamps 76

12 Quality assurance, checks and taking-over 76

12.1 CZ.1 Quality assurance 76

Annex G Earthing systems 77

G.2 Minimum dimensions of earth electrode materials ensuring mechanical strength and corrosion resistance
CZ.1 Minimum dimensions of earth electrode materials 77
G.6 Reduction factor related to earthwires of overhead lines
CZ.1 Values of reduction factors related to earthwires of overhead lines 77

Annex H Earthing systems 77

H.2 Basis for verification
H.2.2 Resistance to earth
CZ.1 Calculation of resistance to earth 77
H.3 Installation of earth electrodes and earthing conductors
H.3.1 Installation of earth electrodes
H.3.1.3 Jointing the earth electrodes
CZ.1 Location of copper and steel earth electrodes 77
H.3.2 Installation of earthing conductors
CZ.1 Corrosion protection of earthing conductors 77

Annex M Typical values of the geotechnical parameters of soils and rocks 78

M.1 General
CZ.1 Design values of the geotechnical parameters of soils and rocks 78
M.2 Definitions
CZ.1 Classification of soils and classification of grains and components 78
M.3 Units
CZ.1 Symbols and units 78

Annex A/CZ Map of Ice Zones in the Czech Republic 1 sheet

Foreword

1. The Czech National Committee (NC) is identified by the following address :

CZECH STANDARDS INSTITUTE email: info@csni.cz
Biskupský dvůr 5 tel: ++420 221 802 111
CZ–110 02 PRAHA 1 fax: ++420 221 802 301
Czech Republic

2. The Czech NC has prepared this Part 3–19 of EN 50341 listing the Czech National Normative Aspects (NNA) under its sole responsibility and duly passed this document through the CENELEC and CLC/TC11 procedures.

   NOTE The Czech NC also takes sole responsibility for the technically correct co-ordination of this EN 50341-3-19 with EN 50341-1. It has performed the necessary checks in the frame of quality assurance/control. However, it is noted that this quality assurance/control has been made in the framework of the general responsibility of a standards committee under the national laws/regulations.

3. This EN 50341-3-19 is normative in the Czech Republic and informative for other countries.

4. This EN 50341-3-19 has to be read in conjunction with EN 50341-1, hereinafter referred as Part 1. All clause numbers used in Part 3–19 correspond to those of Part 1. Specific subclauses which are prefixed CZ are to be read as amendments to the relevant text in Part 1. Any necessary clarification regarding the application of Part 3–19 in conjunction with Part 1 shall be referred to the Czech NC that will, in co-operation with CLC/TC11, clarify the requirements. When no reference is made in Part 3–19 to a specific subclause, then Part 1 applies.

5. In the case of „boxed values“ defined in Part 1, amended values (if any) which are defined in Part 3–19 shall be taken to account in the Czech Republic.
   However any boxed values, whether in Part 1 or Part 3–19, shall not be amended in the direction of greater risk in a Project Specification.

6. The Czech NC declares in accordance with subclause 3.1 of Part 1 that this Part 3–19 follows the „General approach“ (subclause 4.2) and that consequently subclause 4.3 „Empirical approach“ is not applicable for Czech Republic.

7. The national Czech standards/regulations quoted in Part 3–19 are identified/listed in 2.3/CZ.2 and 2.3/CZ.3.

   NOTE All national standards referred to in this Part 3–19 will be replaced by the relevant European Standards as soon as they become available and are declared by the Czech Standards Institute to be applicable and thus reported to the secretary of CLC/TC11.

Clause National regulation

1 General scope – Field of application

(ncpt) **CZ.1 Field of application**
(amendment to clause 1, note 1 of Part 1)

This standard applies to new overhead power lines with rated voltages exceeding 45 kV AC and is not applicable to existing power lines.

Power line under construction may be completed according to standards which were in force at the time of line design elaboration. The parties concerned shall agree any possible application of certain clauses of this standard.

In case of power line under design stage, the parties concerned shall agree the extent of the application of this standard.

The extent of the application of this standard in respect of reconstruction, relaying and extension of and to the existing power lines shall be determined in the Project Specification. Simultaneously, the Project Specification shall determine which one of previous national standards shall be used and to what extent shall be used within the project in question.

The new branch line of the existing power line shall be considered as a new power line except for a junction support for which specific requirements shall be defined in the Project Specification.

This standard also applies to new overhead power lines with a rated voltage of 110 kV AC where their circuits are placed on common structures together with circuits with rated voltages ranging from 1 kV to 45 kV AC.

NOTE Amending provisions for circuits with rated voltages exceeding 1 kV, including references to relevant standards, are included in individual clauses of this Part 3-19 of the Standard.

(ncpt) **CZ.2 Power lines with insulated conductors**
(amendment to clause 1, note 2 of Part 1)

This standard also applies to overhead power lines with insulated conductors.

NOTE Amending provisions, including references to relevant standards, are included in individual clauses of this Part 3-19 of the Standard.

(ncpt) **CZ.3 Conductors and cables for telecommunication purposes**
(amendment to clause 1, note 3 of Part 1)

This standard also applies to conductors and cables for telecommunication purposes used on overhead lines which either contain or do not contain conductive elements (e.g. All Dielectric Self Supporting Cables – ADSS).

(ncpt) **CZ.4 Installation of telecommunication equipment on supports**
(amendment to clause 1, note 3 of Part 1)

Provisions of this standard also apply to the telecommunication equipment and devices (aerials, dish antennas, etc.) which are installed on individual supports of overhead power lines, especially in terms of wind and ice loads on such installed equipment. Design and installation has to respect requirements of the utility operating the line in question. The design of such telecommunication equipment has to incorporate such technical solutions and such precautions, which shall allow safe access and maintenance of both a power line and telecommunication equipment, and which shall provide protection of persons performing repairs or maintenance of the power line and/or telecommunication equipment against electric shock and protection of telecommunication equipment and attached installations against the influence of the power line (short-circuits, switching and lightning overvoltages etc.).

Clause National regulation

2 Definitions, symbols and references

2.1 Definitions

(ncpt) **CZ.1 phase conductor containing optical fibres (OPCON)**

bare *aluminium based or steel based conductor* containing an optical unit with optical fibres. OPCON phase *conductor* has the function of phase *conductor* to transmit electric current and simultaneously the function of telecommunication transmission path through optical fibres

(ncpt) **CZ.2 combined line**

line with a rated voltage of 110 kV AC where common *supports* bear also circuits with rated voltages ranging from 1 kV to 45 kV

(ncpt) **CZ.3 junction support**

support of an overhead line to which lines of three or more different directions are attached provided that the number of circuits attached to the given *support* is larger than the number of circuits attached to adjacent *supports* (unless they are junction supports as well)

(ncpt) **CZ.4 Y–branch support**

support of an overhead double or multi-circuit line to which *conductors* of a double or multi-circuit line (on common *supports*) are attached to one side and the same number of phase *conductors* of at least two lines on separate *supports* are attached to the opposite side

(ncpt) **CZ.5 span**

part of a line between attachment points of a *conductor* on two consecutive *supports* (IEV 466-03-01)

NOTE This definition is included for the reason that the English word “span” corresponds with the Czech conversion used in ČSN IEC 50 (466) which means “a span length”

(ncpt) **CZ.6 overhead telecommunication line**

wire or cable line and telecommunication equipment leading above ground and outside buildings and transmitting information via electromagnetic waves

(ncpt) **CZ.7 aluminium based conductor**

bare *conductor* made of round or shaped wires being concentric lay stranded with alternating directions of stranding, with grease or not, produced of materials or various materials according to one of following alternatives

- aluminium wires
- aluminium alloy wires
- combination of aluminium wires and aluminium alloy wires
- combination of aluminium wires and steel zinc coated wires
- combination of aluminium wires and aluminium clad steel wires
- combination of aluminium alloy wires and steel zinc coated wires
- combination of aluminium alloy wires and aluminium clad steel wires

(ncpt) **CZ.8 steel based conductor**

bare *conductor* made of round or shaped wires being concentric lay stranded with alternating directions of stranding, with grease or not, produced of materials or various materials according to one of following alternatives

- steel zinc coated wires
- aluminium clad steel wires

(ncpt) **CZ.9 section support in front of a substation**

the nearest *section support* of a line before this line enters a substation

NOTE Conductor tensions, attached to this support from both sides, are usually different.

Clause National regulation

(ncpt) **CZ.10 earthwire (ground wire) containing optical fibres (OPGW)**

bare *aluminium based or steel based conductor*, containing an optical unit with optical fibres. Earth wire with optical fibres has the function of an earth wire protecting the given line and simultaneously the function of a telecommunication transmission path via optical fibres

2.2 List of symbols

(ncpt) **CZ.1** Symbols which are contained in EN 50341-3-19 and are not contained in EN 50341-1, or which are contained in EN 50341-3-19 also with a different meaning than in 2.2 EN 50341-1, are included below.

Symbol	Signification	References
b_{emp}	Minimum clearance between conductors within the span according to empirical formula	5.4.3/CZ.4
c_{ALT}	Altitude factor (for the basic reference wind speed)	4.2.2.1.2/CZ.1
c_{emp}	Constant in empirical formula for the minimum clearance between conductors within the span	5.4.3/CZ.4
D_{el1}	Minimum clearance required to prevent a disruptive discharge between phase conductor and external object at earth potential during fast front and slow front overvoltages (external clearance)	5.3.5.3/CZ.1
D_{el2}	Minimum clearance required to prevent a disruptive discharge between phase conductor and support structure during fast front and slow front overvoltages (internal clearance)	5.3.5.3/CZ.1
D_{el3}	Minimum clearance required to prevent a disruptive discharge between phase conductor in window of a support and support structure during fast front and slow front overvoltages (internal clearance)	5.3.5.3/CZ.1
D_{el4}	Minimum clearance required to prevent a disruptive discharge between phase conductor and earth wire during fast front and slow front overvoltages (internal clearance)	5.3.5.3/CZ.1
D_{tr}	Horizontal distance of a tree trunk from the most endangered conductor	5.4.4/CZ.3
E	Modulus of elasticity of a conductor	4.2.7/CZ.4
f	Conductor sag under specified conditions	5.4.3/CZ.4
f_r	Conductor sag in horizontal distance *r* from the attachment point of insulator set	5.4.3/CZ.4
g	Acceleration of gravity	4.2.4.4/CZ.1
g_c	Self-weight of a conductor per unit length	4.2.7/CZ.2
g_{cl}	Weight of ice covered conductor per unit conductor length	4.2.7/CZ.4
H	Altitude at the site	4.2.2.1.2/CZ.1
H_{tr}	Height of a tree	5.4.4/CZ.3
h_C	Mean height of all conductors of a circuit in the span	4.2.2.4.1/CZ.3
h_{mean}	Average conductor height above ground in the line section	4.2.2.4.1/CZ.3
h_{C_mean}	Average height of all conductors of the circuit in the line section	4.2.2.4.1/CZ.3
h_{c_tr}	Height of the most endangered conductor above the horizontal plane of the tree base	5.4.4/CZ.3
I_d	Design ice load per unit conductor length	4.2.3.2/CZ.1
i	Maximum movement of the conductor attachment point in the line direction	4.2.7/CZ.4

Clause	National regulation		
	K_{aH}	Altitude factor at a height of *H* > 1000 m above sea level	5.3.4/CZ.2
	K_{a1000}	Altitude factor at a height of *H* = 1000 m above sea level	5.3.4/CZ.2
	K_h	Height factor for the ice load	4.2.3.2/CZ.1
	k_{emp}, k_{emp_r}	Factor depending on weight and diameter of a conductor and on mutual position of both conductors	5.4.3/CZ.4
	L	Section length	4.2.2.4.1/CZ.4
	L_{ins}	Vertical length of that part of insulator set which may swing in the direction perpendicular to the line	5.4.3/CZ.4
	L_{ins_r}	Equivalent vertical length of insulator set calculated from lengths of insulator sets on both adjacent supports	5.4.3/CZ.4
	Q_{Wc}	Wind force on conductor in one span	4.2.2.4.1/CZ.1
	Q_{Wcl}	Wind force on ice covered conductor in one span	4.2.4.5/CZ.1
	Q_{Wcx}	Component of wind force on conductor in direction of the cross-arm longitudinal axis	4.2.2.4.1/CZ.1
	Q_{Wcy}	Component of wind force on conductor in direction perpendicular to the cross-arm longitudinal axis	4.2.2.4.1/CZ.1
	q_{hcl}	Dynamic wind pressure on ice covered conductor in the height *h*	4.2.4.3/CZ.1
	q_{Wc}	Wind load on conductor per unit length	4.2.2.4.1/CZ.4
	q_{Wcl}	Wind load on ice covered conductor per unit length	4.2.4.5/CZ.2
	r	Horizontal distance between the attachment point of a shorter insulator set and the point in a span, where the distance between conductors is checked	5.4.3/CZ.4
	S	Conductor cross-section	4.2.7/CZ.4
	T_0	Horizontal component of conductor tension at the average temperature of the coldest month in year	9.2.4/CZ.2
	U_{rwH}	Required withstand voltage for the altitude *H* > 1000 m	5.3.4/CZ.2
	U_{rw1000}	Required withstand voltage for the altitude *H* = 1000 m	5.3.4/CZ.2
	U_{rwLI}	Required withstand voltage for lightning impulse	5.3.4/CZ.1
	U_{rwSI}	Required withstand voltage for switching impulse	5.3.4/CZ.1
	U_{rw50Hz}	Required withstand voltage for power frequency overvoltage	5.3.4/CZ.1
	u	Deflection of the support in the line direction	4.2.7/CZ.4
	$V_{mean,0}$	Basic reference wind speed	4.2.2.1.2/CZ.1
	α_{SL}	Reduction factor of ice load for security loads	4.2.7/CZ.1
	δ, δ_r	Angle describing mutual position of both conductors	5.4.3/CZ.4
	θ	Line angle	4.2.2.4.1/CZ.1
	π	Number 3,1416 (circular constant)	4.2.4.4/CZ.1
	ψ_{Wc}	Combination value for a wind action on conductors	4.2.4.1/CZ.1
	ψ_{Wins}	Combination value for a wind action on insulator sets	4.2.4.1/CZ.1
	ψ_{Wpol}	Combination value for a wind action on poles	4.2.4.1/CZ.1
	ψ_{Wt}	Combination value for a wind action on lattice towers	4.2.4.1/CZ.1
	Ω	Angle of incidence for the critical wind direction	4.2.2.4.1/CZ.1

Clause National regulation

2.3 References

(ncpt) **CZ.1 General**

National laws, statutory rules and binding regulations are included in following 2.3/CZ.2. International and national standards quoted in EN 50341-3-19 and not included in 2.3 EN 50341-1 are included in 2.3/CZ.3.

The set of standards included in 2.3 EN 50341-1 under a common title of Eurocodes is effective in the Czech Republic including the Czech National Application Documents related to relevant standards, unless EN 50341-1 and/or these Czech National Normative Aspects (EN 50341-3-19) stipulate otherwise.

NOTE Some EN, IEC, ISO and CISPR International Standards and publications implemented as Czech National Standards – ČSN EN, ČSN IEC, ČSN ISO and ČSN CISPR – include informative notes and informative annexes being effective in the Czech Republic.

(A-dev) **CZ.2 National laws, government decrees and other binding rules of law**

Reference	Title
13/1997 Sb.	Zákon o pozemních komunikacích *Road Act*
104/1997 Sb.	Vyhláška ministerstva dopravy o pozemních komunikacích *Regulation of the Ministry of Transport on Roads*
114/1995 Sb.	Zákon o vnitrozemské plavbě *Inland Navigation Act*
222/1995 Sb.	Vyhláška ministerstva dopravy o vodních cestách *Regulation of the Ministry of Transport on Waterways*
266/1994 Sb.	Zákon o dráhách *Railway Act*
324/1990 Sb.	Vyhláška Českého úřadu bezpečnosti práce a Českého báňského úřadu o bezpečnosti práce a technických zařízení při stavebních pracích *Regulation of the Czech Work Safety Office and Czech Mining Office Board on work safety and safety of technical equipment being used in construction works*
458/2000 Sb.	Zákon o podmínkách podnikání a o výkonu státní správy v energetických odvětvích a o změně některých zákonů (energetický zákon) *Act on Conditions of Enterprise and on Performance of State Administration in Power Industries and on Alteration of Certain Acts (Energy Act)*
480/2000 Sb.	Nařízení vlády o ochraně zdraví před neionizujícím zářením *Decree of the government on health protection against non-ionizing radiation*

(ncpt) **CZ.3 Standards**

Reference	Title
ENV 1993-3-1	Navrhování ocelových konstrukcí. Část 3-1: Věže, stožáry a komíny – Věže a stožáry *Design of steel structures* *Part 3-1: Towers, masts and chimneys – Towers and masts*
ČSN P ENV 1991-2-4 (*NAD to ENV 1991-2-4)*	Zásady navrhování a zatížení konstrukcí Část 2-4: Zatížení konstrukcí – Zatížení větrem *Basis of design and actions on structures* *Part 2-4: Actions on structure – Wind actions*

Clause	National regulation	
	ISO 3864	Bezpečnostní barvy a bezpečnostní značky *Safety colours and safety signs*
	ISO 8501-1	Příprava ocelových povrchů před nanesením nátěrových hmot a obdobných výrobků – Vizuální vyhodnocení čistoty povrchu. Část 1: Stupně zarezavění a stupně přípravy ocelového podkladu bez povlaku a ocelového podkladu po úplném odstranění předchozích nátěrů *Preparation of steel substrates before application of paints and related products – Visual assessment of surface cleanliness Part 1 : Rust grades and preparation grades of uncoated steel substrates and of steel substrates after overall removal of previous coatings*
	ČSN CISPR 18-2+A1	Charakteristiky rušení od venkovních vedení a zařízení vysokého *napětí*. Část 2: Metody měření a postup pro určení mezí *Radio interference characteristics of overhead power lines and high-voltage equipment. Part 2 : Methods of measurement and procedure for determining limits*
	ČSN 33 0405	Elektrotechnické předpisy. Navrhování venkovní elektrické izolace podle stupně znečištění *Electric engineering regulations. Design of outdoor insulation depending on pollution level*
	ČSN 33 2000-4-41	Elektrotechnické předpisy – Elektrická zařízení – Část 4: Bezpečnost – Kapitola 41: Ochrana před úrazem elektrickým proudem *Electrical installations of Buildings. Part 4 : Protection for safety. Chapter 41 : Protection against electric shock*
	ČSN 33 2000-5-54	Elektrotechnické předpisy – Elektrická zařízení – Část 5: Výběr a stavba elektrických zařízení – Kapitola 54: Uzemnění a ochranné vodiče *Electrical equipment. Part 5 : Selection and erection of electrical equipment. Chapter 54 : Earthing arrangements and protective conductors*
	ČSN 33 2040	Elektrotechnické předpisy. Ochrana před účinky elektro-magnetického pole 50 Hz v pásmu vlivu zařízení elektrizační soustavy. *Electric engineering regulations. Protection against effects of the electromagnetic fields 50 Hz in the zone of influence of electric power system device*
	ČSN 33 2160	Elektrotechnické předpisy. Předpisy pro ochranu sdělovacích vedení a zařízení před nebezpečnými vlivy trojfázových vedení vn, vvn a zvn *Electric engineering regulations. Rules for the protection of telecommunication lines and equipment against dangerous influences of three-phase high voltage, very high voltage and ultra high voltage lines*
	ČSN 33 2165	Elektrotechnické předpisy. Zásady pro ochranu ocelových izolovaných potrubí uložených v zemi před nebezpečnými vlivy venkovních trojfázových vedení a stanic vvn a zvn *Electric engineering regulations. Principles for protection of buried insulated steel pipelines against dangerous effects of very high voltage overhead lines and very high voltage stations*
	ČSN 33 3201	Elektrické instalace nad AC 1 kV *Power installations exceeding 1 kV AC*

Clause	National regulation	
	ČSN EN 50423-1	Elektrická venkovní vedení s napětím nad 1 kV AC do 45 kV včetně- Část 1: Všeobecné požadavky – Společné specifikace *Overhead electrical lines exceeding AC 1 kV up to and including AC 45 kV - Part 1: General requirements - Common specification*s
	ČSN EN 50110-1	Obsluha a práce na elektrických zařízeních. *Operation of electrical installations*
	ČSN 34 1390	Elektrotechnické předpisy ČSN. Předpisy pro ochranu před bleskem *Rules for lightning protection and lightning conductors*
	ČSN 38 0810	Použití ochran před přepětím v silových zařízeních *Overvoltage protection of electric equipment*
	ČSN EN 13501-1	Požární klasifikace stavebních výrobků a konstrukcí staveb - Část 1: Klasifikace podle výsledků zkoušek reakce na oheň Fire classification of construction products and building elements - Part 1: Classification using test data from reaction to fire tests
	ČSN 74 3282	Ocelové žebříky. Základní ustanovení *Steel ladders. Basic provisions.*

3 Basis of design

3.1 General

(ncpt) **CZ.1** In respect of the design of new overhead lines with a rated voltage exceeding 45 kV AC, the philosophy based on the “General approach” is adopted (see subclause 4.2). Therefore, subclause 4.3 “Empirical approach” is not applicable.

3.2 Requirements

3.2.2 Reliability of overhead lines

(ncpt) **CZ.1** The required reliability level shall be stated in the Project Specification. The reliability level selected shall at least correspond to reliability level 1 except for temporary constructions (e.g. temporary bypasses) and/or for components installed temporarily or temporarily serving for other purposes where temporary design situations with reduced values of partial factors for actions may be specified in the Project Specification (see 4.2.11/CZ.3, CZ.4 and CZ.5).

NOTE The reliability level should be specified with regard to consequences of a possible failure for the power supply, safety of people (e.g. in urban, suburban and heavily populated regions), with regard to consequences of a possible failure for other infrastructure components (e.g. railways, roads and motorways and other lines) and also with regard to experience in operation of existing lines.

3.2.3 Security requirements

(ncpt) **CZ.1** Basic requirements to secure a system against uncontrollable progressive (cascading) failures are solved through application of special security loads in accordance with 4.2.7. In the Project Specification, further additional measures may be required, e.g. restriction of lengths of line sections or limitation of a number of other supports between section supports.

3.2.5 Co-ordination of strength

(ncpt) **CZ.1** Possible requirements to co-ordinate the strength of the individual components constituting the line, or structural parts of these components, may be specified in the Project Specification. In this Part 3-19 of the Standard, the strength co-ordination is stipulated – unless otherwise specified in the Project Specification – for above-ground parts of steel structures of lattice tower stubs (see 7.3.5.1.1/CZ.1).

Clause National regulation

NOTE The strength co-ordination of individual components constituting the line, or structural parts of these components, is in practice obtained e.g. by multiplying of a partial factor γ_M for a material property of a particular component or a part of such component by a strength co-ordination factor >1.
In this case, the probability of failure of such component or its part is lower than the probability of a failure of a component or its part with which the strength co-ordination is required. A typical example is the use of a strength co-ordination factor of 1,1 for angle and tension towers, respectively. A greater strength may be required for the bottom part of a structure from its foundation up to the first connection (splice plate) above foundation to increase the probability that this part of the structure remains undamaged in case that a tower should fail, and so to facilitate the repair of a line. Another example can be the co-ordination of strength between a support and its foundation (see also 8.4/CZ.1).

3.2.6 Additional considerations

(ncpt) **CZ.1** Any further specific requirements, e.g. installation of aircraft warning spheres, night aircraft warning markers, fittings preventing biological pollution of insulators etc., shall be specified in the Project Specification.

3.2.7 Design working life

(ncpt) **CZ.1** If the design working life of an overhead line and its components should be other than 50 years, it has to be specified in the Project Specification. Partial factors for actions in case of a different design working life – see 4.2.11/CZ.3.

3.3 Limit states

3.3.3 Serviceability limit states

(ncpt) **CZ.1** Loads for verification at serviceability limit states relate to characteristic values of loads and they are defined in 4.2.10.2/CZ.3. Criteria of serviceability limit states are defined in clauses relating to particular line components. Additional requirements may occur in the Project Specification.

4 Actions on lines

4.2 Actions, General approach

4.2.1 Permanent loads

(ncpt) **CZ.1 Self-weight of conductors**
Self-weight of a conductor acts on its attachment point as the vertical component of the conductor tension at the attachment point at temperature and climatic actions corresponding to the load case considered. When calculating the vertical load at the conductor attachment point by self-weight of the conductor, the difference in levels of conductor attachment points on both ends of the span shall be considered.

4.2.2 Wind loads

4.2.2.1 Wind speeds

4.2.2.1.2 Mean wind speed V_{mean}

(snc) **CZ.1 Basic reference wind speed $V_{mean,0}$ and mean wind speed V_{mean}**
When determining wind loads, the mean wind speed is taken as a base in conformity with ENV 1991-2-4.

The territory of the Czech Republic is, according to ČSN P ENV 1991-2-4 (National Application Document amending ENV 1991-2-4), divided into two wind zones for which different basic reference wind speeds $V_{mean,0}$ are defined. Boundaries of wind zones are shown in the Map of wind zones in the territory of the Czech Republic at a scale of 1 : 1 000 000, which is Annex 1 of the cited ČSN P ENV 1991-2-4. With regard to the small scale of this Map of wind zones the individual sections of a line can be more closely classified in terms of wind zones in the Project Specification.

Clause National regulation

NOTE 1 Basic reference wind speed $V_{mean,0}$ is indicated in ENV 1991-2-4 by the symbol $v_{ref,0}$.

Mean wind speed V_{mean} in m/s over a period of 10 min at a height of 10 m above the ground in relatively open terrain (category II, see Table 4.2.1) is calculated from

$$V_{mean} = c_{ALT} \cdot V_{mean,0} \,,$$

where

$V_{mean,0}$ is the basic reference wind speed (v m/s) according to Table 4.2/CZ.1,

c_{ALT} is the altitude factor according to Table 4.2/CZ.1.

Table 4.2/CZ.1 – Basic reference wind speeds $V_{mean,0}$ and altitude factors c_{ALT}

Wind zone	Basic reference wind speed $V_{mean,0}$ (m/s)	Altitude H (m)	Altitude factor c_{ALT}
1	24	$H \leq 700$	1
		$700 < H \leq 1300$	1,25
2	26	$H \leq 700$	1
		$700 < H \leq 1300$	1,16
		$H > 1300$	1,27

NOTE 2 Data shown in Table 4.2/CZ.1 are taken from ČSN P ENV 1991-2-4:1997. If the cited standard should be changed or substituted this standard shall be changed accordingly.

4.2.2.1.5 Reference wind speed V_R

(ncpt) **CZ.1** Reference wind speed V_R (wind speed at a height of 10 m above ground at the site in question) is calculated using the formula given in 4.2.2.1.5, where $V_R(II)$ is considered to be V_{mean} according to 4.2.2.1.2/CZ.1.

4.2.2.2 Dynamic wind pressure q_h

(snc) **CZ.1 Air density**

The air density ρ in formula for calculation of dynamic wind pressure at a height h according to 4.2.2.2 is taken as 1,25 kg/m^3 independently of air temperature and altitude H. Table 4.2.3 is not used.

4.2.2.4 Wind forces on overhead line components

4.2.2.4.1 Wind forces on conductors

(ncpt) **CZ.1 Wind force on conductor, acting on the support at the attachment point of the insulator set**

When calculating wind forces on a tangent support, resulting from each sub-conductor from the two adjacent spans according to the formula given in 4.2.2.4.1, it is needed to consider values of dynamic wind pressure q_h and gust response factor G_q calculated for a height h of the centre of wind pressure on the conductor, which is determined for the conductor within the range of both halves of the two adjacent spans on both sides of the support.

Alternatively, the wind force on the support, resulting from each sub-conductor from both adjacent spans, can be determined as a sum of halves of wind forces acting on the conductor within both individual entire adjacent spans.

Wind force on a conductor in a single span Q_{Wc} is calculated according to the following equation:

$$Q_{Wc} = q_h \cdot G_q \cdot G_c \cdot C_c \cdot d \cdot L \cdot \cos^2 \Omega$$

Clause National regulation

where

q_h is the dynamic wind pressure (see 4.2.2.2 and 4.2.2.2/CZ.1), calculated corresponding to the centre of wind pressure on the conductor for over the span length. Here, the centre of wind pressure is the height of the conductor above ground h, determined according to 4.2.2.4.1/CZ.3.

G_q is the gust response factor according to 4.2.2.3, where the height h of the conductor above ground according to 4.2.2.4.1/CZ.3 is taken into account.

G_c is the structural resonance factor for conductors depending on the span length, also termed "span factor". The span factor is calculated using formulas given in Table 4.2.5, where

- L is the length of the given individual span in meters used for the calculation of lateral wind force on the conductor acting on the individual support at the attachment point of the insulator set,

C_c is the drag factor for the conductor according to 4.2.2.4.1/CZ.2,

Ω is the angle of incidence of the considered wind direction and given span (see Figure 4.2/CZ.1).

On each support limiting the given span, a half of such force is acting. The force direction is horizontal and perpendicular to the span.

When considering a general case of wind load on the conductor from wind blowing at angle ϕ between wind direction and the cross-arm longitudinal axis and various angles between the cross-arm axis and conductors in spans on both sides of the support (complementary angles to the line angles $\theta_1/2$ and $\theta_2/2$ – see Figure 4.2/CZ.2), wind force on the conductor, transferred from the conductor to the support, can be calculated according to following equations:

Wind force component in the direction of the cross-arm longitudinal axis

$$Q_{Wcx} = \frac{Q_{Wc1}}{2} \cdot \cos\left(\frac{\theta_1}{2}\right) + \frac{Q_{Wc2}}{2} \cdot \cos\left(\frac{\theta_2}{2}\right) =$$

$$= C_c \cdot d \cdot \left[q_{h1} \cdot G_{q1} \cdot G_{c1} \cdot \frac{L_1}{2} \cdot \cos^2\left(\phi + \frac{\theta_1}{2}\right) \cos\left(\frac{\theta_1}{2}\right) + q_{h2} \cdot G_{q2} \cdot G_{c2} \cdot \frac{L_2}{2} \cdot \cos^2\left(\phi - \frac{\theta_2}{2}\right) \cos\left(\frac{\theta_2}{2}\right) \right]$$

Wind force component in the direction perpendicular to the cross-arm longitudinal axis

$$Q_{Wcy} = \frac{Q_{Wc1}}{2} \cdot \sin\left(\frac{\theta_1}{2}\right) - \frac{Q_{Wc2}}{2} \cdot \sin\left(\frac{\theta_2}{2}\right) =$$

$$= C_c \cdot d \cdot \left[q_{h1} \cdot G_{q1} \cdot G_{c1} \cdot \frac{L_1}{2} \cdot \cos^2\left(\phi + \frac{\theta_1}{2}\right) \sin\left(\frac{\theta_1}{2}\right) - q_{h2} \cdot G_{q2} \cdot G_{c2} \cdot \frac{L_2}{2} \cdot \cos^2\left(\phi - \frac{\theta_2}{2}\right) \sin\left(\frac{\theta_2}{2}\right) \right]$$

In case of a tangent support ($\theta_1 = \theta_2 = 0$) and the angle of incidence $\Omega = \phi$ it follows

$$Q_{Wcx} = \frac{Q_{Wc1}}{2} + \frac{Q_{Wc2}}{2} = C_c \cdot d \cdot \left(q_{h1} \cdot G_{q1} \cdot G_{c1} \cdot \frac{L_1}{2} + q_{h2} \cdot G_{q2} \cdot G_{c2} \cdot \frac{L_2}{2} \right) \cos^2 \phi, \quad Q_{Wcy} = 0$$

In case of an angle support with cross-arm longitudinal axis bisecting the angle between line directions in spans adjacent to the angle support ($\theta_1/2 = \theta_2/2 = \theta/2$) and the wind direction parallel to the cross-arm longitudinal axis ($\phi = 0$), the following equations apply

$$Q_{Wcx} = \left(\frac{Q_{Wc1}}{2} + \frac{Q_{Wc2}}{2} \right) \cos\left(\frac{\theta}{2}\right) = C_c \cdot d \cdot \left(q_{h1} \cdot G_{q1} \cdot G_{c1} \cdot \frac{L_1}{2} + q_{h2} \cdot G_{q2} \cdot G_{c2} \cdot \frac{L_2}{2} \right) \cos^3\left(\frac{\theta}{2}\right)$$

$$Q_{Wcy} = \left(\frac{Q_{Wc1}}{2} - \frac{Q_{Wc2}}{2} \right) \sin\left(\frac{\theta}{2}\right) = C_c \cdot d \cdot \left(q_{h1} \cdot G_{q1} \cdot G_{c1} \cdot \frac{L_1}{2} - q_{h2} \cdot G_{q2} \cdot G_{c2} \cdot \frac{L_2}{2} \right) \cos^2\left(\frac{\theta}{2}\right) \cdot \sin\left(\frac{\theta}{2}\right)$$

Clause National regulation

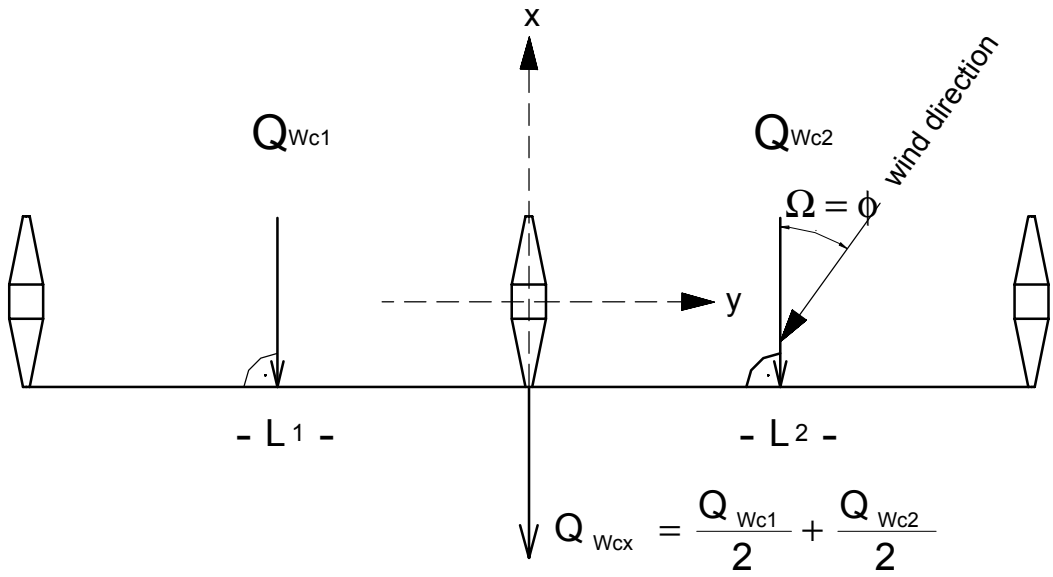

Figure 4.2/CZ.1 – Wind force on conductor, transferred to a tangent support

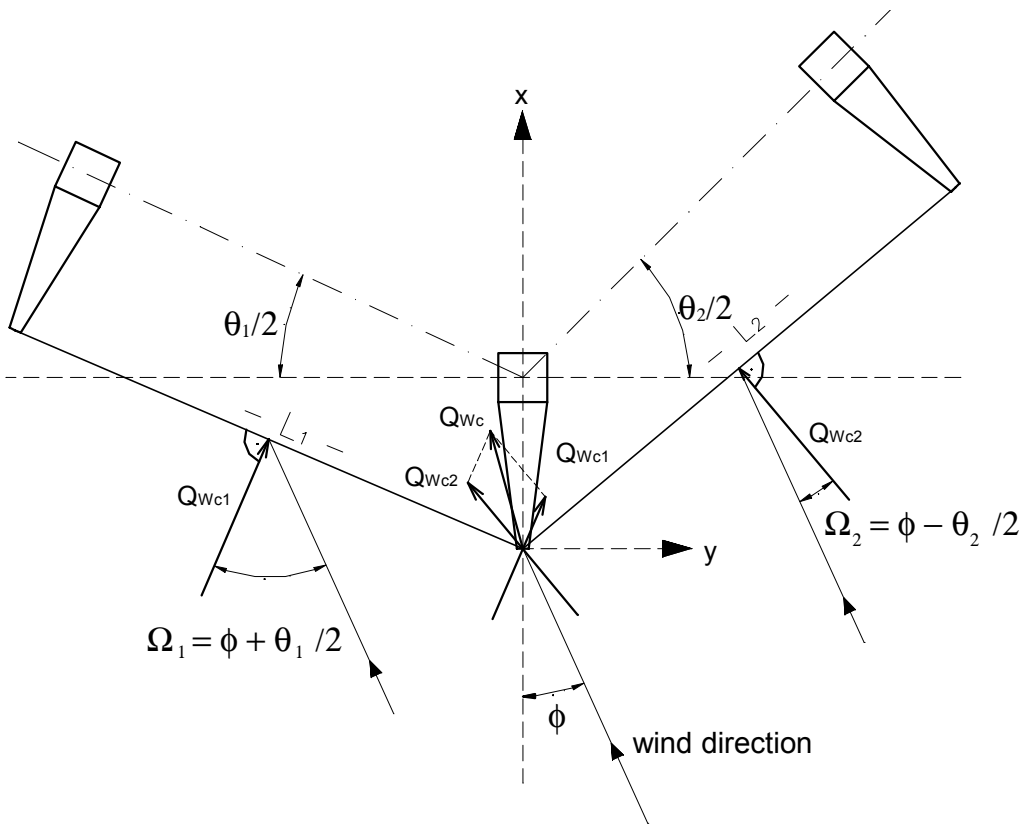

Figure 4.2/CZ.2 – Wind force on conductor, transferred to the angle support

Clause National regulation

(snc) **CZ.2 Drag factors for conductors**

When calculating the wind force on the conductor according to 4.2.2.4.1 and 4.2.2.4.1/CZ.1, following values of a drag factor C_c for conductors, depending on the diameter d of the conductor, are considered:

C_c = 1,0 for conductors with a diameter of $d \geq 16$ mm;

C_c = 1,1 for conductors with a diameter of 12,5 mm $\leq d <$ 16 mm;

C_c = 1,2 for conductors with a diameter of $d <$ 12,5 mm.

(ncpt) **CZ.3 Height of conductors above ground**

The height of conductor above ground h in the given span is the height of the centre of gravity of the conductor above ground. In case of reasonably flat terrain, it is possible to consider the height of conductor h as the mean height of attachment points of the conductor above ground on both supports, limiting the given span, minus 2/3 of the sag of the conductor in this span at a temperature of – 5°C (without any consideration of the influence of additional loads on conductor from wind or ice). If $h <$ 10 m, h = 10 m is considered.

For the calculation of wind forces on conductors, transferred to the individual support according to 4.2.2.4.1/CZ.1, the conductor height h is determined separately for each conductor and for each span.

The mean height h_C of all conductors of the circuit in the given span, which is allowed to use when calculating ice loads on conductors according to 4.2.3.3/CZ.1 and conductor tensions in the line section, is calculated as the arithmetic mean of heights of individual conductors of the circuit in the given span:

$$h_C = (h_{_1} + h_{_2} + h_{_3}) / 3 ,$$

where $h_{_1}$, $h_{_2}$, $h_{_3}$ are heights of individual conductors of the circuit in the given span as given above.

If insulator sets on suspension supports allow conductor attachment points to deflect in the longitudinal direction of the line, it is possible, when calculating conductor tensions in the line section under wind loads on bare as well as on ice covered conductors, to consider the average height h_{C_mean} of all conductors of a circuit in all spans of the line section as the height of conductors h.

The average height h_{C_mean} of all conductors of a circuit in the line section is calculated as the weighted arithmetic mean of mean heights of conductors of the circuit h_{C_i} in all spans of the line section using the formula

$$h_{C_mean} = \Sigma (h_{C_i} \cdot L_{_i}) / \Sigma L_{_i} ,$$

where h_{C_i} are mean heights of conductors of a circuit in individual spans and $L_{_i}$ are lengths of individual spans i in the line section.

If different circuits are placed one above the other, the average height h_{C_mean} shall be determined separately for each circuit. For earth wires, the (average) height above ground shall be determined separately.

If the average height of a conductor in the line section h_{mean} is to be determined for each conductor of a circuit separately (see 4.2.3.2/CZ.1), it is calculated similarly as the weighted arithmetic mean of heights of a conductor $h_{_i}$ in all spans of the line section.

NOTE The same average height h_{C_mean} (or h_{mean} respectively) can be chosen for more line sections. However, the chosen average height shall not be less than real average heights, calculated using above-mentioned formula, for most of the relevant line sections. For other relevant line sections it shall not be less than calculated average heights by more than 2 m.

(ncpt) **CZ.4 Unit wind load on conductor**

If the unit wind load (per one unit of the conductor length) and average height of conductors h_{C_mean} (or h_{mean} respectively) according to 4.2.2.4.1/CZ.3 are used for the calculation of conductor tensions, the mean wind load on conductors per unit length q_{Wc} (N/m) is calculated as follows:

$$q_{Wc} = q_h \cdot G_q \cdot G_c \cdot C_c \cdot d \cdot \cos^2 \Omega ,$$

Clause National regulation

where

q_h, G_q, C_c, Ω see 4.2.2.4.1/CZ.1,

G_c is the structural resonance factor for conductors (span factor). The span factor is calculated according to equations, given in Table 4.2.5, where L is the length of the line section.

For the calculation of the design conductor tensions under wind loads, the partial factor for a wind action γ_W shall be applied to characteristic wind loads prior to the calculation of conductor tensions.

4.2.2.4.3 Wind forces on lattice towers

(ncpt) **CZ.1 Drag factors**

Wind forces on lattice towers are calculated according to 4.2.2.4.3. Drag factors for lattice towers of rectangular cross-sections of members with flat surface are specified in the diagram in Figure 4.2.2. However, with regard to the fact that drag factors are not explicitly expressed in 4.2.2.4.3, it is possible to take them from ENV 1993-3-1. Also drag factors for other types of lattice towers (towers with triangular cross-sections, towers built of members with tubular cross-sections or of combined members) and for towers, supporting the line accessories (e.g. ladders or tubes) in a larger scope or carrying individual accessories (e.g. antennas), should be taken from the standard mentioned above.

NOTE For towers of rectangular cross-section built of flat sided members and provided that the projected area of accessories made of tubular or angular profiles on each surface is not larger than 10 % of the area of such surface, the drag factor of the respective panel face according to ENV 1993-3-1 is given by

C_{tn} = 3,96 (1–1,5χ + χ^2), where χ is the solidity ratio of panel n of the tower (see 4.2.2.4.3, Figure 4.2.2).

4.2.3 Ice loads

4.2.3.1 General

(snc) **CZ.1** The ice loads on line components result from in-cloud ice accretion in the form of hard or soft rime, or from precipitation icing in the form of freezing rain (glaze ice) or of wet or dry snow accretion. When stipulating ice loads on line components according to this standard, in-cloud ice in the form of rime with a density of ρ_I = 500 kg/m^3 is considered.

The reference ice load, I_R, is the ice load with return period of T = 50 years per unit conductor length (in N/m) at height of h = 10 m above ground. For the purpose of stipulation of the reference ice load according to this standard, the Czech Republic territory is divided to ice zones, which are shown in the Map of Ice Zones in the Czech Republic at a scale of 1 : 1 000 000, which is included in these National Normative Aspects for the Czech Republic (EN 50341-3-19) as the informative annex A/CZ.

The classification of a line route or parts thereof into relevant ice zones for the design purposes shall be determined in the Project Specification with consideration of the above mentioned Map of Ice Zones, the long-term experience of line's operator in given region and client's requirements, eventually taking to account recommendations of a specialized organization.

Unless otherwise specified in the Project Specification, the ice load on supports is not considered.

Ice on insulator sets is considered only for the calculation of vertical loads. Here, the ice load of 35 N per 1 m of insulator string length for insulator sets in the ice zone N0, 70 N/m in the ice zone N1, 140 N/m in the ice zone N2, 210 N/m in the ice zone N3 and 350 N/m in ice zones from N5 to N18. These loads are taken as design values.

For aircraft warning spheres, the ice load with a thickness corresponding to the design thickness of ice on the conductor with a diameter of 30 mm in the relevant ice zone is considered.

Clause National regulation

4.2.3.2 Characteristic ice load

(snc) **CZ.1 Reference, characteristic, and design ice loads on conductors**
The reference ice loads, I_R, are specified in following Table 4.2.3/CZ.1.

Table 4.2.3/CZ.1 – Reference ice load I_R (N/m) per unit length of a conductor with diameter *d* (mm) at height *h* = 10 m above ground

Ice zone	Reference ice load I_R (N/m) per unit length of a conductor with diameter *d* (mm)	
	$d \leq 30$ mm	$d > 30$ mm
N0	1,298 + 0,1562 *d*	5,267 + 0,0239 *d*
N1	3,873 + 0,2698 *d*	10,566 + 0,0467 *d*
N2	10,566 + 0,4457 *d*	21,423 + 0,0838 *d*
N3	18,305 + 0,5866 *d*	33,032 + 0,0957 *d*
N5	35,376 + 0,8155 *d*	55,569 + 0,1424 *d*
N8	63,077 + 1,0890 *d*	90,254 + 0,1831 *d*
N12	102,063 + 1,3852 *d*	143,619
N18	162,924 + 1,7501 *d*	215,427
NK	Shall be evaluated separately case by case	

NOTE The above-specified reference ice loads have been derived from statistical evaluation of measured ice masses on measuring rods with a diameter of 30 mm with a return period of 20 years. The mass of ice on the conductor with a diameter of 30 mm (with a return period of 20 years) in the corresponding ice zone is specified by a number behind symbol (letter) N, i.e. up to 1 kg/m in N1 zone, up to 2 kg/m in N2 zone, up to 3 kg/m in N3 zone, etc., with the exception of the ice zone N0, where the mass of ice on the conductor with a diameter of 30 mm (with a return period of 20 years) is up to 0,5 kg/m. In the ice zone NK, the corresponding mass of ice is more than 18 kg/m.

The characteristic ice load per unit length of the conductor I_K (N/m) at height *h* above ground is given by

$$I_K = K_h \cdot I_R ,$$

where

I_R is the reference ice load per unit length of the conductor with diameter *d* in the relevant ice zone according to Table 4.2.3/CZ.1

K_h is the height factor for the ice load, which is equal to:

$$K_h = \left(\frac{h}{10}\right)^{0,13}$$ for ice zones N0 to N3,

$$K_h = \left(\frac{h}{10}\right)^{0,25}$$ for ice zones N5 to N18 and NK,

where *h* (m) is the conductor height above ground according to 4.2.3.3/CZ.1, considering the conductor sag at a temperature of – 5°C without ice.

The design ice load per unit length of a conductor, I_d, is given by

$$I_d = I_K \cdot \gamma_I ,$$

where partial factors of ice loads for various reliability levels are specified in Table 4.2.11/CZ.1.

4.2.3.3 Ice forces on conductors

(ncpt) **CZ.1** With regard to the fact that the value of ice loads can be different in the two adjacent spans, the vertical ice force, by which ice load on each sub-conductor is acting on a support, is calculated as a sum of contributions from the two adjacent spans according to the following equation

$$Q_I = I_1 \cdot L_{W1} + I_2 \cdot L_{W2} ,$$

Clause National regulation

where

I_1 *and* I_2 are the ice loads per unit length of the conductor (N/m) in the relevant adjacent spans according to 4.2.3.2/CZ.1,

L_{W1} and L_{W2} are the contributions of the weight spans of the two adjacent spans (m)

For the given support, the contribution of the weight span L_W of the respective adjacent span is the horizontal distance between the lowest point of conductor catenary in the respective span and the attachment point of the conductor on the given support. The value of L_W is positive (+), if the lowest point of a conductor catenary is on the same side of the support as the span in question, or negative (–), if the lowest point of a conductor catenary is on the opposite side of the given support than the span in question (i.e. the imaginary lowest point).

NOTE 1 The expression $L_{W1} + L_{W2}$ indicating the horizontal distance between the lowest points of conductor catenaries of two consecutive spans is the so-called weight span.

NOTE 2 In case of a substantial difference in levels of adjoining conductor attachment points, the slant distance between the lowest point of conductor catenary in the relevant span and the attachment point, or the length of catenary between the lowest point of catenary and the attachment point is taken instead of horizontal distance L_W.

NOTE 3 The force Q_I, by which ice accretion on the conductor is acting on the support, is usually not determined separately, however it is considered in combination with permanent load resulting from the self-weight of conductor acting on the support.

The height of a conductor above ground h in the given span, which is used to calculate the characteristic ice load on the conductor, is calculated according to 4.2.2.4.1/CZ.3.

However, for the calculation of forces, by which ice on each sub-conductor is acting on the support in conductor attachment points, or for the calculation of forces, by which each ice covered sub-conductor is acting on the support, it is possible to use following simplifications, when determining the height of conductor above ground h:

The mean height h_C of all conductors of a circuit in the given span, determined according to 4.2.2.4.1, can be used as a conductor height h for all conductors of the same circuit. However, this simplification shall not be used in areas with very heavy ice loads (in ice zones N5 to N18 and NK) where the height above ground h shall be determined separately for each conductor. For earth wires, the height above ground is determined separately.

If insulator sets on suspension supports allow conductor attachment points to deflect in the longitudinal direction of the line, it is possible, when calculating the conductor tensions in the line section under ice loads, to consider the average height h_{C_mean} of all conductors of a circuit in all spans of the line section as the conductor height h. If different circuits are placed one above the other, the average height h_{C_mean} shall be determined separately for each circuit. In areas with very heavy ice loads (in ice zones N5 to N18 and NK) the average height above ground h_{mean} shall be determined separately for each conductor.

NOTE See also the note to 4.2.2.4.1/CZ.3.

For the calculation of the design conductor tensions under ice loads, the partial factor for an ice action γ_I shall be applied to characteristic ice loads prior to the calculation of conductor tensions.

4.2.4 Combined wind and ice loads

4.2.4.1 Combined probabilities

(snc) **CZ.1 Combinations of loads, combination factors for wind loads**

Only the combination of an extreme ice load, equal to the design value of the ice load $\gamma_I \cdot Q_{IK}$, with the action of a moderate wind $\psi_W \cdot Q_{WK}$ shall be considered.

However, the Project Specification may require to consider also the combination of a high wind speed with a moderate ice load. In this case the Project Specification shall also determine, according to 4.2.4.1, the relation between a high wind speed and extreme wind speed and the value of a combination factor for ice action ψ_I.

Clause National regulation

When calculating loads on conductors by combined actions of ice and wind, a moderate wind speed is taken as 50 % of the extreme wind speed with a return period of 50 years. Hence the value of a combination factor for wind load on the ice covered conductor ψ_{Wc} is equal to 0,25. The Project Specification may include higher value of a combination factor ψ_{Wc}.

In load cases with combined wind and ice loads, it is assumed that insulator sets are loaded by wind action, where the wind forces are taken according to 4.2.2.4.2, and multiplied by a combination factor ψ_{Wins} = 0,5, lattice towers are loaded by a wind force according to 4.2.2.4.3 and 4.2.2.4.3/CZ.1, multiplied by a combination factor ψ_{Wt} = 0,5, and poles are loaded by wind forces according to 4.2.2.4.4, multiplied by a combination factor ψ_{Wpol} = 0,3. The increase of the area exposed to wind by a thickness of ice is not considered in these cases.

For aircraft warning spheres, the projected area of the sphere increased by the thickness of ice, corresponding to the thickness of the design ice accretion on the conductor with a diameter of 30 mm in the respective ice zone, a drag factor C_x = 0,4 and a combination factor ψ_{Wx} = 0,25 are considered.

4.2.4.2 Drag factors and ice densities

(snc) **CZ.1** The density of ice is considered as ρ_I = 500 kg/m^3. The drag factor for ice covered conductors C_{cI} is taken as 1,1 for all conductor diameters.

4.2.4.3 Dynamic wind pressure

(ncpt) **CZ.1** For combination of loads on the conductor by an extreme design ice and moderate wind, the dynamic wind pressure on the ice covered conductor is given by

$$q_{hcI} = \psi_{Wc} \cdot q_h ,$$

where q_h is the dynamic wind pressure according to 4.2.2.2 and 4.2.2.2/CZ.1,

ψ_{Wc} is the combination factor according to 4.2.4.1/CZ.1.

4.2.4.4 Equivalent diameter *D* of ice covered conductor

(ncpt) **CZ.1** For combination of loads on the conductor by an extreme design ice and moderate wind, the equivalent diameter *D* (m) of the ice covered conductor is calculated as follows:

$$D = \sqrt{d^2 + \frac{4 \cdot I}{g \cdot \pi \cdot \rho_I}} ,$$

where

- d is the diameter of the conductor (m),
- I is the ice load per unit length of the conductor (N/m) according to 4.2.3.2/CZ.1, where the design ice load I_d is used for the calculation of design loads,
- g is the acceleration of gravity g = 9,81 (m/s^2),
- π is the number 3,1416 (circular constant),
- ρ_I is the ice density according to 4.2.4.2/CZ.1.

4.2.4.5 Wind forces on supports from ice covered conductors

(ncpt) **CZ.1 Wind force on ice covered conductor, acting on the support at the attachment point of insulator set**

Analogous to 4.2.2.4.1/CZ.1, the wind force on the support, resulting from each ice covered sub-conductor from the two adjacent spans, can be determined as a sum of halves of wind forces on the ice covered conductor in the two entire adjacent spans.

Wind force on an ice covered conductor in a single span Q_{WcI} is calculated according to the following equation

$$Q_{WcI} = q_{hcI} \cdot G_q \cdot G_c \cdot C_{cI} \cdot D \cdot L \cdot \cos^2 \Omega ,$$

Clause National regulation

where

q_{hcl} is the dynamic wind pressure according to 4.2.4.3/CZ.1, calculated corresponding to the centre of wind pressure on the conductor over the span length. Here, the centre of wind pressure is the height of the conductor above ground h, determined according to 4.2.2.4.1/CZ.3.

G_q is the gust response factor (see 4.2.2.4.1 and 4.2.2.4.1/CZ.1),

G_c is the span factor (see 4.2.2.4.1 and 4.2.2.4.1/CZ.1),

C_{cl} is the drag factor for the ice covered conductor according to 4.2.4.2/CZ.1

D is the equivalent diameter of the ice covered conductor (m) according to 4.2.4.4/CZ.1,

Ω is the angle of incidence for the critical wind direction and span (see Figure 4.2/CZ.1).

On each support limiting the span, a half of this force is acting. The force direction is horizontal and perpendicular to the span.

When considering a general case of wind load on ice covered conductor from wind blowing at angle ϕ between wind direction and the cross-arm longitudinal axis and various angles between the cross-arm axis and conductors in spans on both sides of the support (complementary angles to line angles $\theta_1/2$ and $\theta_2/2$ – see Figure 4.2/CZ.2), wind force on the conductor, transferred from the conductor to the support, can be calculated according to equations, specified in 4.2.2.4.1/CZ.1, where:

– instead of Q_{Wc} Q_{Wcl} is used,

– instead of q_h q_{hcl} is used,

– instead of C_c C_{cl} is used, and

– instead of d D is used.

(ncpt) **CZ.2 Unit wind load on ice covered conductor**

If the unit wind load (per one unit of the conductor length) and average height of conductors h_{C_mean} according to 4.2.2.4.1/CZ.3 are used to calculate conductor tensions, the mean wind load on ice covered conductors per unit length, q_{Wcl} (N/m), is calculated similarly to 4.2.2.4.1/CZ.4 as follows:

$$q_{Wcl} = q_{hcl} \cdot G_q \cdot G_c \cdot C_{cl} \cdot D \cdot \cos^2 \Omega ,$$

where

q_{hcl}, G_q, C_c, Ω see 4.2.4.5/CZ.1,

G_c is the structural resonance factor for conductors (span factor). The span factor is calculated according to equations, specified in Table 4.2.5, where

L is the length of the line section.

For the calculation of the design conductor tensions under combined wind and ice loads, the partial factor for an ice load γ_I and combination factor for a wind action ψ_{Wc} shall be applied to wind and ice loads prior to the calculation of conductor tensions.

4.2.5 Temperature effects

(snc) **CZ.1 Design situations for verification at limit states and associated temperatures**

(a) For verification at ultimate limit states, the minimum temperature without other climatic loads is taken as – 30°C for reliability level 1, – 35°C for reliability level 2 and – 40°C for reliability level 3, if the Project Specification does not define, with respect to local conditions, a different temperature. For verification at serviceability limit states, the minimum temperature without any other climatic loads is taken as – 30°C.

(b) A temperature of – 5°C is assumed under the extreme wind speed condition.

(c) Reduced wind speed in combination with minimum temperature is not considered, if otherwise stated in the Project Specification. If this design situation is required, the Project Specification shall also determine the respective minimum temperature.

(d) A temperature of – 5°C is assumed under the extreme ice load condition.

Clause National regulation

(e) A temperature of – 5°C is used for the combination of wind and ice loads.

NOTE In all of the specified design situations, the above-specified temperatures are considered to be conductor temperatures.

Relevant temperatures to check clearances are specified in Clause 5 of this Part 3-19 of the Standard.

(ncpt) **CZ.2 Reference temperature**

A temperature of – 5°C is determined as the reference temperature. The design shall specify, for each conductor in each line section, the horizontal component of conductor tension or of mechanical stress of the conductor at this conductor temperature without any wind and/or ice load.

4.2.6 Construction and maintenance loads

4.2.6.1 General

(ncpt) **CZ.1 General**

The erection of supports and conductor stringing and sagging shall be performed according to approved working procedures. Loads, specified in 4.2.6.1/CZ.2 and in 4.2.6.1/CZ.3 (construction loads), and loads, specified in 4.2.6.1/CZ.4 and in 4.2.6.2/CZ.1, are final design values and therefore they are not to be further multiplied by any load factor. Simultaneously, permanent actions are to be considered (self-weight of structure and hardware/ equipment) with construction loads specified below.

The compliance with requirements, specified in 4.2.6.1/CZ.2 and in 4.2.6.1/CZ.3, is under the Contractor's responsibility. However, the Project Specification may determine erection loads, their application points and further requirements also for the design purposes.

(ncpt) **CZ.2 Erection of supports**

Erection of a support shall be performed according to approved working procedures. During erection works, the design resistance of the structure or any part of it shall not be exceeded by 1,5 multiple of the static loads, acting on the structure under the method of construction being used.

(ncpt) **CZ.3 Stringing and sagging of conductors**

CZ.3.1 Conductor tensions

The actual temperature during stringing and sagging, without any additional climatic loads, is considered in the calculation of conductor tensions. The Project Specification may define the minimum temperature, for which the conductor tensions are to be calculated. However, in such case the stringing of conductors may not be performed at a lower temperature.

In the calculation of design loads on supports during stringing and sagging of conductors, 1,5 times conductor tensions is to be taken for conductors in place. For conductors being moved twice the sagging tensions is recommended to use. The lower value of the factor (however, not lower than 1,5) may be used, if the operation is carefully controlled (e.g. if the stringing equipment with automatic limitation of the pulling force is used).

CZ.3.2 Vertical forces

Increased vertical component of conductor tension at the attachment point, resulting from the vertical angle between the tangent to the conductor at the attachment point and horizontal plane considering conductor tension according to 4.2.6.1/CZ.3.1, and any combinations of loaded and unloaded conductor attachment points at the support representing the conductor stringing sequence are to be taken into account. It can be of practical importance especially in case of a great difference in levels of conductor attachment points.

The increased vertical load at the conductor attachment point shall be taken to account, if the stringing equipment (tensioner, pulling winch) is placed close to the support.

Clause National regulation

CZ.3.3 Transverse forces

Angle supports shall be capable of resisting the transverse loads produced by conductor tensions according to 4.2.6.1/CZ.3.1.

CZ.3.4 Longitudinal and vertical forces acting on temporary terminal (dead-end) supports during stringing of conductors

CZ.3.4.1 Longitudinal forces

Supports being used during the stringing and sagging as terminal (dead-end) ones shall be capable of resisting longitudinal forces, resulting from sagging tensions, specified in 4.2.6.1/CZ.3.1, for any combination of loaded and unloaded conductor attachment points at the support, representing the conductor stringing sequences. If it is necessary, these supports shall be reinforced by temporary guys to obtain the required longitudinal resistance.

NOTE Bodies and cross-arms of temporary terminal (dead-end) supports are usually anchored during conductor stringing.

CZ.3.4.2 Vertical forces

If the longitudinal resistance of temporary terminal supports is increased by guys, it is needed to take into account also the increased vertical loads at points, where guys are attached to the structure, due to vertical components of tensions in guys. When anchoring rigid supports, the guys should be pre-stressed. It is therefore necessary to check the tensions in anchoring guys. The actual tensions in guy wires shall be multiplied by a partial factor for action γ_P = 1,5.

It is needed to take into account that the vertical load at the guy attachment point is increased, if such temporary guy is placed close to the support.

CZ.3.5 Longitudinal forces acting on supports with conductors in stringing sheaves

While the conductor is in stringing sheaves during stringing and sagging, the sheave attachment point is loaded by longitudinal force (N). Its value is given by the unit weight of the conductor (N/m), multiplied by the difference in elevation of the lowest points of the conductor (m) in two adjacent spans at actual sagging tension. This force is usually much lower than the security loads except for supports with large difference in levels of conductor attachment points on neighbouring supports, where it is needed to check whether, for any combination of loaded and unloaded conductor attachment points at the support, representing conductor stringing sequences, the design resistance is not exceeded in any part of the structure when loaded by twice the specified longitudinal forces.

(ncpt) **CZ.4 Vertical maintenance loads**

All attachment points of insulator sets and earth wires shall have the design resistance corresponding at least to twice vertical load at the conductor temperature ranging from – 20°C to + 40°C without any action of other climatic loads.

4.2.6.2 Loads related to the weight of linesmen

(ncpt) **CZ.1** The characteristic erection and maintenance load, acting on cross-arms, shall not be lower than 1,0 kN in case of cross-arms for circuits with a rated voltage of 110 kV and lower, and 2,0 kN in case of cross-arms for circuits with rated voltages of 220 and 400 kV. For the design purposes, this load is multiplied by a partial factor for an action γ_P = 1,5. This load is acting together with permanent loads and characteristic ice loads at a temperature of – 5°C. Application points of specified erection and maintenance loads – see 4.2.6.2.

Where walkways or working platforms are installed, they shall be designed for the maximum imposed loads, multiplied by a partial factor for an action $\gamma_P \geq 1{,}5$.

For all members of structure which can be climbed and are inclined with an angle less than 30° to the horizontal, a minimum characteristic load of 1,0 kN, multiplied by a partial factor for an action γ_P = 1,5, acting vertically in the centre of the member shall be assumed. The Project Specification may require a higher load. Members, to which a ladder is to be fixed, shall be designed for at least twice specified load.

Clause National regulation

Steps of any kind shall be rated for a concentrated characteristic load of 1,0 kN, multiplied by a partial factor for an action γ_P = 1,5, acting vertically at a structurally unfavourable position. The Project Specification may require a higher load (e.g. for certain types of steps only).

4.2.7 Security loads

(ncpt) **CZ.1 Torsional loads**

The residual static load at any one earth wire or phase conductor attachment point, resulting from the release of the tension of a phase conductor or sub-conductor or of an earth wire in an adjacent span shall be applied. Tension release in such conductor and in such span of the two adjacent spans is considered that should cause a higher load on any one individual member of the structure and/or foundation.

For circuits with bundle conductors, tension release in one sub-conductor of a bundle is considered for suspension and angle supports, and tension release in all sub-conductors of a bundle for section and terminal (dead-end) supports is considered.

The Project Specification may define more severe requirements, i.e. tension release in several sub-conductors of a bundle, or simultaneous release of tension in several conductors.

Loads on supports and conductor tensions are calculated at the conductor temperature of – 5°C, without any wind load, and with loads on conductors by reduced ice, corresponding to the characteristic ice load according to 4.2.3.2/CZ.1, multiplied by a reduction factor α_{SL}. For lines with circuits with rated voltages up to 110 kV inclusive, the value of a reduction factor is α_{SL} = 0,3, for lines with circuits with rated voltages of 220 or 400 kV, the value of a reduction factor is α_{SL} = 0,4. However, the weight of ice deposited on insulator sets is not considered here. The same conditions apply to other unreleased conductors.

The Project Specification may determine other value of a reduction factor α_{SL}.

NOTE For α_{SL} = 0,3, the reduced ice corresponds approximately to the mean year ice, for α_{SL} = 0,4 then to the ice with a return period of 3 years.

In case of tension release in a single conductor or in case of tension release in an entire bundle, it is possible to calculate with a reduced vertical load at the attachment point, corresponding to the weight of an insulator set and to the weight of the conductor and ice only in the adjacent intact span.

Where tension release in all sub-conductors of a bundle is not considered, the weight of insulator set, the weight of all sub-conductors and the weight of ice on all sub-conductors of a bundle in both adjacent spans are considered.

(ncpt) **CZ.2 Longitudinal bending loads**

Longitudinal bending loads resulting from unbalanced conductor tensions at a temperature of – 5°C shall be applied, where a fictitious overload equal to the self-weight of the conductors g_c is considered for all conductors in all spans in one direction from the support, while no overload of conductors is considered in all spans in the other direction (see 4.2.7 item (b)).

The Project Specification may determine other temperature or a fictitious overload equal to the self-weight of conductors multiplied by a factor that, however, may not be less than 0,75.

For special supports, e.g. for high crossing towers, the Project Specification may define more severe requirements, based on a higher fictitious overload, or on one-sided release of conductor tensions.

NOTE Unbalanced load, transferred from the conductor to the support, depends on an initial conductor tension, but mainly on the degree of freedom at the conductor attachment point. For conductor supported by insulator set allowing movement of conductor attachment point in the direction parallel to the line, the unbalanced load is substantially lower than for fixed conductor.

(ncpt) **CZ.3 Longitudinal bending loads for section supports**

Longitudinal loads for section supports are based on one-sided release of tension in all conductors. The total release of conductor tensions in such adjacent span is considered, that should lead to higher load on any individual member of the structure and/or foundation.

Clause National regulation

Loads on supports and conductor tensions are calculated at a conductor temperature of – 5°C, without any wind load, taking to account reduced ice loads on the conductors, corresponding to characteristic ice load according to 4.2.3.2/CZ.1, multiplied by a reduction factor α_{SL} = 0,4. The weight of ice deposited on insulator sets is not considered. The Project Specification may determine a higher ice load (generally, or for individual supports).

The vertical loads on the support do not include the weight of insulator sets, conductors and ice on the conductors from the span, where the release of conductor tensions is considered.

NOTE In the same way, junction section supports are assessed, where the total release of conductor tensions acting on the support individually from each line direction is assumed.

(ncpt) **CZ.4 Mechanical conditions of application**

Security loads on the supports, based on conditions specified in 4.2.7/CZ.1, 4.2.7/CZ.2 and 4.2.7/CZ.3, may be calculated taking to account load release, resulting from any swing of the insulator sets, rotation of pivoting insulator cross-arms and articulated supports and elastic deflection or rotation of supports and flexible insulators, under consideration of interaction with other conductors, which can influence the security load.

In case of suspension supports with suspension insulator sets or pivoting insulator cross–arms, it is possible, under common conditions and in reasonably flat terrain, to perform calculation for so called ruling span of the line section (see 4.2.10.1, NOTE 2), unless otherwise specified in the Project Specification.

Alternatively, unless otherwise specified in the Project Specification, torsional or longitudinal security loads from single conductors, based on one-sided release of their tensions, may be determined as a fraction of the conductor tensions according to the following equation

$$A_K = \beta \cdot T_0 ,$$

where A_K is the characteristic residual conductor tension,

β is the reduction factor for the conductor tension,

T_0 is the initial horizontal tension in the conductor loaded by reduced ice according to 4.2.7/CZ.1.

Values of reduction factor β are determined according to Figure 4.2.7/CZ.1.

Clause National regulation

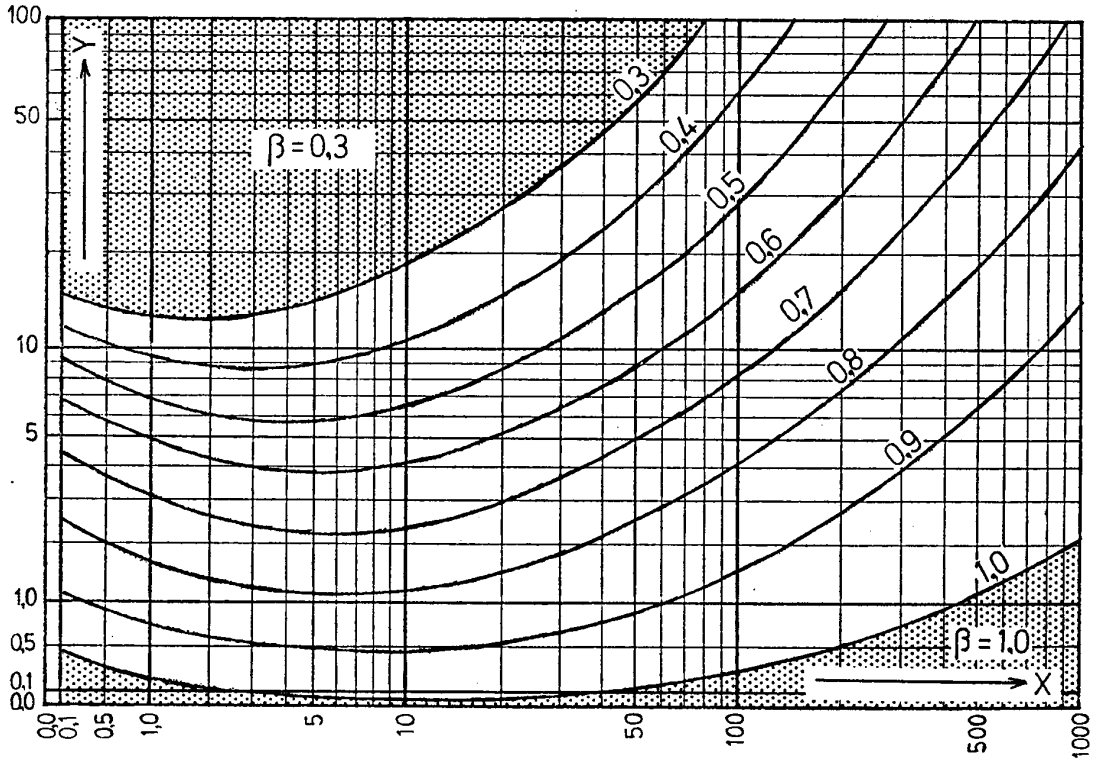

$$X = \frac{E \cdot S}{T_0}\left(g_{cl}\,\frac{L}{T_0}\right)^2 \qquad Y = \frac{E \cdot S}{T_0} \cdot \frac{i+u}{L}$$

where L is the length of the adjacent intact span (m), or the length of the ruling span (m),
E is the modulus of elasticity of the conductor (N/mm^2),
g_{cl} is the weight of the conductor per unit length (N/m) including additional external load, i.e. $g_{cl} = g_c + l$
S is the conductor cross-section (mm^2),
i is the maximum movement at the conductor attachment point in the direction parallel to the line in relation to the attachment point of the insulator set to the structure (m),
u is the deflection of the support in the direction of the line in the point where the insulator set is attached (m),
T_0 is the initial horizontal conductor tension (N) prior to failure

Figure 4.2.7/CZ.1 – Reduction β–factor for conductor tension

NOTE In case of rigid self-supporting towers with rigid cross-arms, it is possible to omit the deflection u of the support (u = 0). This presumption is the conservative one.

(ncpt) **CZ.5 Supplementary security measures**

CZ.5.1 General

The line security may be increased by adopting certain measures, specified in following Table 4.2.7/CZ.1.

Clause National regulation

Table 4.2.7/CZ.1 – Supplementary security measures

Description of supplementary security measure	Comments
Increase the residual static loads by a factor >1 in any conductor attachment point, or increase the number of released sub-conductors	For lines, where higher security level is justified
Increase the number of points, in which the torsional load is applied simultaneously	Suitable for multi-circuit or even for double-circuit lines
Calculate the residual static load for higher initial tension through consideration of higher ice load or of a load from certain wind in this load case	Suitable for angle supports in severe climatic conditions
Insertion of section supports in certain intervals	For important lines in areas with heavy ice loads

If these supplementary security measures are required, it has to be specified in the Project Specification, where these measures are to be detailed as well.

NOTE The typical example is the requirement to design at least every tenth support as the section one.

CZ.5.2 Supplementary security measure in ice zones with very heavy ice loads

In ice zones ranging from N5 to N18 and NK, the number of other supports in the line section between section supports may not be more than 9. The Project Specification may limit the number of supports between section supports even more.

(ncpt) **CZ.6 Alternative security measures**

CZ.6.1 Torsional loads

As far as it is explicitly specified in the Project Specification, the intermediate supports in sections between section supports need not be designed with regard to torsional security loads specified in 4.2.7/CZ.1 on condition that the number of other supports in sections between section supports is not more than 9 or more than a lower number as defined in the Project Specification, respectively. Section supports, however, have to meet requirements specified in 4.2.7/CZ.1 and 4.2.7/CZ.3 or any more severe requirements defined in the Project Specification.

CZ.6.2 Longitudinal bending loads

As far as it is explicitly specified in the Project Specification, the intermediate supports in sections between section supports need not be designed with regard to longitudinal security loads specified in 4.2.7/CZ.2, if the following alternative measures are simultaneously fulfilled.

a) The number of other supports in sections between section supports is not more than 9 or more than any lower number, as defined in the Project Specification. Section supports, however, have to meet requirements specified in 4.2.7/CZ.1 and 4.2.7/CZ.3 or any more severe requirements defined in the Project Specification.

b) A fictitious longitudinal load is applied in all conductor attachment points, the value of which is equal to 1/3 of characteristic wind load on the conductor without any ice according to 4.2.2.4.1/CZ.1, acting perpendicularly (Ω = 0) on the two adjacent spans. Simultaneously, permanent loads at a temperature of – 5°C are considered.

NOTE Provisions in 4.2.7/CZ.6 apply also in the case that the function of a section support is fulfilled by a terminal (dead-end) support.

(ncpt) **CZ.7 Security loads relating to failure of one string of multiple insulator set**

If multiple insulator set is to be attached to the support structure at more than one attachment point, the release of load from one attachment point of the insulator set shall be investigated. All remaining attachment points of insulator string are considered to be loaded by forces transferred from the phase conductor and insulator string itself at the maximum

Clause National regulation

load resulting from the load cases 1a, 1b and 2a according to Table 4.2.11/CZ.1, but the partial factors of variable actions γ_W and γ_I are taken as equal to 1,00 in this case. Neither the reduction of the conductor tension nor dynamic effects due to the failure of one insulator string are taken to account. The release of force at such one attachment point of any one insulator set leading to the maximum stress in any component of the support structure is considered. Forces resulting from the same load cases are acting at attachment points of other insulator sets.

NOTE This security load may be critical for support cross-arms only.

The bearing resistance of remaining insulators and insulator set fittings in case of failing of one string of the multiple insulator set is verified using the same loads as mentioned above.

4.2.8 Forces due to short-circuit currents

(ncpt) **CZ.1** Forces resulting from short-circuit currents are not considered, unless otherwise specified in the Project Specification.

4.2.9 Other special forces

(ncpt) **CZ.1 Avalanches, creeping snow and earthquakes**
Forces, resulting from avalanches, creeping snow and/or seismic quakes are not considered, unless the Project Specification requires such consideration.

4.2.10 Load cases

4.2.10.1 General

(ncpt) **CZ.1 Classification of supports according to their purposes**
Combinations of actions on the support shall be properly selected taking to account the required resistance and intended purpose. If a support serves for more purposes simultaneously, the design shall respect all combinations of loads, corresponding to intended purposes.

According to the purpose, supports are classified and designated as follows:

- Suspension support N (see definition 2.1.89)
- Angle support R (see definition 2.1.87)

NOTE 1 Tension support in a straight line RT (see definition 2.1.91), which does not have a function of a section support (see definition 2.1.88), is treated as an angle tension support.

NOTE 2 Suspension support serving simultaneously as an angle one is called the angle suspension support and designated as NR.

- Section support V (see definition 2.1.88)

NOTE 3 Section support, serving simultaneously as an angle support, is called angle section support and designated as VR.

- Terminal (dead-end) support Ko (see definition 2.1.92)

NOTE 4 The terminal (dead-end) support may have longitudinal cross-arm axes in the plane perpendicular to the line direction, from which the conductor tension is expected (designation Ko), or in the plane containing with this direction angle other than the right angle (designation KoR).

- Junction support O (see definition 2.1/CZ.3). Loads for the junction support – see 4.2.10.1/CZ.2.
- Y–branch support Y (see definition 2.1/CZ.4). Loads for the Y–branch support – see 4.2.10.1/CZ.3.
- Section support in front of a substation (see definition 2.1/CZ.9). Loads for the section support in front of a substation – see 4.2.10.1/CZ.4. Unless otherwise specified in the Project Specification, maximum three supports serving as suspension, angle suspension

Clause National regulation

or angle ones are allowed in the line section between the section support in front of the substation and the structure of the substation, to which the line conductors are attached.

If other special supports are required, the Project Specifications shall define requirements put on them.

(ncpt) **CZ.2 Combinations of loads for junction support**

The junction support shall be designed to meet the requirements for the support of the main line as for the suspension or tension support, or as for the angle suspension or angle tension support respectively, and simultaneously it shall resist, in the given load case, forces resulting from branch conductors.

In case forces resulting from branch conductors decrease the effect of forces, by which conductors of the main line act on the support, then the load cases without the influence of forces resulting from branch conductors have to be considered as well.

If the junction support is to be designed simultaneously as the section one, security loads specified in 4.2.7/CZ.1 and 4.2.7/CZ.3 are considered, taking to account tension release in such one conductor and in such of all adjacent spans (torsional loads), which should lead to higher load on any individual member of the structure or foundation, and tension release in all conductors in such adjacent span, which should lead to higher load on any individual member of the structure and/or on foundation.

The Project Specification shall define, whether the junction support is to be designed as a junction or a junction & section support.

The Project Specification may determine more severe conditions, e.g. the total tension release in all conductors individually from any one direction under more severe conditions (using characteristic or design load values).

(ncpt) **CZ.3 Combinations of loads for Y–branch support**

The Y–branch support shall meet requirements, placed according to circumstances upon the angle & suspension, or angle & tension support.

If the Y–branch support is to be designed simultaneously as the section support, security loads specified in 4.2.7/CZ.1 and 4.2.7/CZ.3 are considered, taking to account the tension release in such conductor and in such of all adjacent spans (torsional loads), which should lead to higher load on any individual member of the structure and/or on foundation, and the tension release of all conductors from that side of the support (longitudinal loads), which should lead to higher load on any individual member of the structure and/or on foundation.

The Project Specification shall define, if the Y–branch support is to be designed as Y–branch support or as Y–branch & section support.

The Project Specification may determine more severe conditions, e.g. the total tension release in all conductors of a single circuit from a specified direction (torsional loads) under determined conditions (with reduced ice loads according to 4.2.7/CZ.3 or with characteristic or design load values).

(ncpt) **CZ.4 Combinations of loads for section support in front of a substation**

The section support in front of a substation shall meet requirements, placed upon the section support, unless the Project Specification determines more severe requirements, e.g. requirements for a terminal (dead-end) support, or increased requirements for a Y–branch support (torsional loads).

(ncpt) **CZ.5 Special load case**

See 4.2.10.1.

If the ice load on the individual conductor decreases the mechanical stress in a particular member or cross-section of a structure, such lower ice load (or its combination with wind load on conductor) is considered, which should lead to the maximum mechanical stress of the member or cross-section in question (the combination factor for simultaneous wind load on an ice covered conductor is not changed). Loads on other conductors at the support remain unchanged in the same load case.

Clause National regulation

4.2.10.2 Standard load cases

(ncpt) **CZ.1 Standard load cases**

Load cases, specified in Table 4.2.7, apply with below-mentioned exclusions:

- No wind load is considered in the load case 1b. Only permanent loads are acting at a temperature according to 4.2.5/CZ.1.
- The load case 2a

  NOTE This load case, in comparison with the load case 3, is not usually critical for the verification at the ultimate limit states.
- The load case 2b is not considered, unless otherwise specified in the Project Specification.
- The load case 2d is not considered, unless otherwise specified in the Project Specification.
- The load case 5a is not considered only if it is explicitly stated in the Project Specification. Alternative measures are specified in 4.2.7/CZ.6.1. It is not applicable to section supports and terminal (dead-end) supports, where the load case 5a shall always be considered.
- This load case 5b is not considered only if it is explicitly stated in the Project Specification. Alternative measures are specified in 4.2.7/CZ.6.2. It is not applicable for supports, which serve as section supports or terminal (dead-end) supports. For section supports, the conditions for the load case 5b, specified in 4.2.7/CZ.3, apply.

The load case 5c representing the load release at one attachment point of multiple insulator set in case of one insulator string failing is added. Applied loads are stated in 4.2.7/CZ.7.

(ncpt) **CZ.2 Subsections (a) to (e), relating to Table 4.2.7**

(a) In general, a wind direction perpendicular to the line and at all other angles which may be critical for the design is considered.

NOTE 1 For suspension supports in a straight line, a wind direction perpendicular to the line or at an angle of 45° to the line is usually decisive. In case of certain types of foundations also a wind direction parallel to the line needs to be considered. In case of tension supports in a straight line, on which unequal conductor tensions are acting from both sides, wind in direction of higher conductor tensions needs to be also considered.

For angle, junction and Y–branch supports, a wind direction parallel to the direction of the resultant of conductor tensions, in some case also in the direction perpendicular to the resultant of conductor tensions, is usually decisive.

For terminal (dead-end) supports a wind direction parallel to conductor tensions and a wind direction normal to conductor tensions, in some case also a wind direction at an angle of 45° to conductors need to be considered.

(b) If the load case 2b (uniform ice load, transversal bending) is required by the Project Specification, the design ice load on the conductors on all the cross-arms on one side of the support only is multiplied by a reduction factor $\alpha = 0{,}5$, unless the Project Specification determines other value of a reduction factor α. Ice loads on the insulator sets of these conductors are multiplied by the same factor. In attachment points of other conductors the design ice loads on conductors and insulator sets are acting (see Figure 4.2.4).

(c) In the load case 2c (non-uniform ice load, longitudinal bending) according to Figure 4.2.5, the design ice load on all the conductors in one direction only from all the cross–arms of the support is multiplied by a reduction factor $\alpha_1 = 0{,}35$ and in the other direction by a reduction factor $\alpha_2 = 0{,}7$, unless the Project Specification specifies a lower value of a reduction factor α_1. Ice loads on insulator sets are not considered in this load case. Specified ice loads are applied always in all spans in the line section in one direction from the considered support. Simultaneously, permanent loads and relevant vertical components of ice loads on conductors are considered.

Clause National regulation

This load case is not necessary to consider only in case it is explicitly stated in the Project Specification. However, in such case the number of supports between section supports may not be more than 9 or more than such lower number as specified in the Project Specification.

NOTE 2 For each support, it is needed to inspect both cases (a higher ice load in one or in the other direction from the support) and to consider such case, which leads to higher longitudinal forces at the attachment points. For the calculation of ice loads on conductors, an average height of all conductors of the respective circuit in the line section may be considered.

NOTE 3 In this load case a positive influence of any swing of attachment points of conductors according to NOTE in 4.2.7/CZ.2 is taken into account.

NOTE 4 These load conditions are, in comparison with a security longitudinal bending load according to 4.2.7/CZ.2, usually decisive only in the ice zone N3 and in ice zones with a higher ice load than in the ice zone N3.

(d) If the load case 2d (non-uniform ice load, torsional bending – see Figure 4.2.6) is required by the Project Specification, the design ice load on all the conductors on all the cross-arms on one side only of the support and in one direction of the line only is multiplied by a reduction factor α_3 = 0,35, unless the Project Specification determines a different value of a reduction factor α_3. For all remaining conductors, the design ice load shall be multiplied by a reduction factor α_4 = 0,7. Ice loads on insulator sets are not considered in this load case. Specified ice loads are applied on all spans in the line section in one direction from the considered support. Simultaneously, permanent loads and respective vertical components of ice loads on conductors are considered. The number of conductors, loaded by a non-uniform ice-cover, may be stipulated in the Project Specification differently.

NOTE 5 In this load case, NOTES 2 and 3 specified in subsection (c) are also valid.

NOTE 6 In case of single or double-circuit lines with single conductors in zones with a common ice (ice zones N0 to N2), this load case, in comparison with a torsional security load, is not usually decisive.

(e) The load case, specified in 4.2.10.2 in subsection (e), i.e. longitudinal forces, resulting from ice and/or wind loads, acting on all conductors in spans in one direction from the support only, is not considered, unless the Project Specification with regard to local conditions determines otherwise. If this load case is required, the Project Specification shall define check conditions.

(ncpt) **CZ.3 Load cases for serviceability limit states**

To perform checks at serviceability limit states, loads resulting from the load cases 1a, 1b, 2a and 3 according to Table 4.2.7 (with the modification of load case 1b according to 4.2.10.2/CZ.1) in conjunction with partial factors for an action specified in 4.2.11/CZ.2 are used. Criteria of serviceability limit states are defined in clauses relating to particular line components, where it is also determined, which of specified load cases are used for such verification. The Project Specification may determine other requirements.

4.2.11 Partial factors for actions

(ncpt) **CZ.1 Partial factors for actions for ultimate limit states**

Values of partial factors for an action γ_F, of a combination factor for a wind load ψ_W and of reduction factors α for an ice load, which are used for verification at the ultimate limit states for a design working life of 50 years and for a reliability level defined in the Project Specification, are specified in Table 4.2.11/CZ.1.

In Tables 4.2.11/CZ.1 and 4.2.11/CZ.2 it is understood

- Extreme wind load = characteristic wind load (with a return period of 50 years)
- Extreme ice load = characteristic ice load with a return period of 50 years
- Reduced wind load = characteristic wind load multiplied by a combination factor ψ_W.

Clause National regulation

Table 4.2.11/CZ.1 – Load cases, partial factors for an action, combination factor and reduction factors for verification at ultimate limit states

Load case		Wind	Ice	Level 1		Level 2		Level 3		Weight
		ψ_{Wc}	α (1)	γ_W	γ_I	γ_W	γ_I	γ_W	γ_I	γ_G (2)
1a	Extreme wind load			1,00		1,20		1,40		1,00
1b	Min. temperature									1,00 (3)
2a	Extreme uniform ice load				1,00		1,25		1,50	1,00
2b	Uniform ice load, transversal bending		α		1,00		1,25		1,50	1,00
2c	Unbalanced ice load, longitudinal bending		α_1,α_2		1,00		1,25		1,50	1,00
2d	Unbalanced ice load, torsional bending		α_3,α_4		1,00		1,25		1,50	1,00
3	Combined extreme ice load + reduced wind load	0,25 (4)		1,00	1,00	1,00	1,25	1,00	1,50	1,00
4	Construction and maintenance load			See NOTE (5)						
5a	Security loads, torsional bending		α_{SL}	γ_{A1} = 1,00 see NOTE (6)						1,00
5b	Security loads, longitudinal bending		(α_{SL})..(7)	γ_{A2} = 1,00 see NOTE (7)						1,00
5c	Security loads, failing of one insulator string			γ_{A3} = 1,00 see NOTE (8)						

NOTE 1 Values of reduction factors α, used in load cases 2b, 2c and 2d, are specified in 4.2.10.2/CZ.2 or in the Project Specification. Load cases 2b and 2d are considered if only it is required in the Project Specification.

NOTE 2 If permanent loads have a favourable influence on resistance and stability of foundations, a partial load factor γ_G = 0,90 shall be considered for all permanent loads except for the self-weight of conductors.

NOTE 3 The value of partial factor for the self-weight of conductor γ_G = 1,20 shall be considered for unfavourable effects of conductor tensions in this load case, while for other permanent loads γ_G = 1,00 remains.

NOTE 4 The value of combination factor for a wind load on ice covered conductors is ψ_{Wc} = 0,25, unless the Project Specification specifies a higher value. For loads on supports, insulator sets and aircraft warning spheres, values ψ_{Wx} are specified in 4.2.4.1/CZ.1.

NOTE 5 Erection and maintenance loads, specified in 4.2.6.1/CZ.1 to CZ.4, and in 4.2.6.2/CZ.1, are design values, which are determined considering $\gamma_P \geq 1,5$.

NOTE 6 Torsional security loads, specified in 4.2.7/CZ.1, are based on tension release in a conductor loaded by reduced ice (see 4.2.7/CZ.1).

NOTE 7 Longitudinal security loads for section supports, specified in 4.2.7/CZ.3, are based on tension release in all conductors loaded by reduced ice (α_{SL} = 0,4), unless otherwise specified in the Project Specification.
Longitudinal security loads for other supports – see 4.2.7/CZ.2.

NOTE 8 Security loads, specified in 4.2.7/CZ.7, are design values representing forces in case of failure of one insulator string of multiple insulator set.

For the calculation of a design conductor tension, partial factors for an action γ_F and combination factor for a wind load ψ_{Wc} are to be applied to loads prior to the conductor tension analysis.

Clause National regulation

(ncpt) **CZ.2 Load factors for serviceability limit states**

Values of partial factors for an action γ_F and of the combination factor for a wind load ψ_W, which are used for verification at serviceability limit states, are specified in Table 4.2.11/CZ.2.

Table 4.2.11/CZ.2 – Load cases, partial factors for an action and combination factor for verification at serviceability limit states

Load case		Wind		Ice	Weight
		ψ_{Wc}	γ_W	γ_I	γ_G
1a	Extreme wind load		1,00		1,00
1b	Min. temperature				1,00
2a	Extreme uniform ice load			1,00	1,00
3	Combined extreme ice load + reduced wind load	0,25 (1)	1,00	1,00	1,00

NOTE The value of a combination factor for a wind load on ice covered conductors is ψ_{Wc} = 0,25, unless the Project Specification specifies any higher value. For loads on supports, insulator sets and aircraft warning spheres, values ψ_{Wx} are specified in 4.2.4.1/CZ.1.

(ncpt) **CZ.3 Partial factors for actions for design working life other than 50 years**

If the design working life different than 50 years is required in the Project Specification, the Project Specification has to also prescribe corresponding values of partial factors for variable climatic actions. Partial factors of variable actions should be determined so that values of variable loads should not be exceeded during the reference period of one year with a required probability, corresponding to the required level of reliability.

NOTE 1 For a design working life longer than 50 years, partial factors of variable actions shall be increased, for shorter design working life they may be reduced. To determine corresponding factors for actions, it is possible to use information included in Annexes B and D or in other verified sources.

NOTE 2 The above-specified provisions may be used e.g. when designing temporary by-passes.

(ncpt) **CZ.4 Double and multi-circiut lines, used temporarily with incomplete number of installed circuits**

These lines shall be designed for a complete installation of circuits. However, due consideration shall be paid to loads on supports and foundations, resulting from temporary incomplete installation of all circuits. For these temporary design situations, it is possible to use reduced values of partial factors of variable climatic loads according to 4.2.11/CZ.3, if they are determined in the Project Specification.

NOTE Mentioned situations shall be taken into account, if circuits or individual conductors are installed asymmetrically with regard to the axis of the line. In load cases 2c and 5b, significant torsional loads are acting on supports. In load cases 1a, 1b, 2a, and 3, forces acting on supports produce additional transversal bending, however its effects are usually lower than effects of loads when all circuits are installed completely.

(ncpt) **CZ.5 Loads on components, temporarily fulfilling other functions**

These components shall be designed to meet their intended functions. In addition, however, due considerations shall be paid to loads on supports and foundations in their temporary functions. For these temporary design situations, it is possible to use reduced values of partial factors of variable climatic loads according to 4.2.11/CZ.3, if they are determined in the Project Specification.

NOTE This is important for example for section supports, temporarily used as terminal (dead-end) supports, if construction is to be performed in stages. If this temporary design situation does not occur during the winter season, no consideration is to be paid to ice loads (γ_I = 0). Otherwise, it is possible to use reduced values of factors of variable loads γ_F, determined with regard to the length of a period of temporary use of a support for a different purpose.

Clause National regulation

5 Electrical requirements

5.2 Currents

5.2.1 Normal current

(ncpt) **CZ.1 Conditions for calculation of design maximum conductor temperature**
Conditions for calculation of the design maximum conductor temperature are specified in 5.4.2.2.1/CZ.1.

If the highest short-term special current loading above the normal level is determined in the Project Specification, the design maximum temperature of conductors under this short-term loading or conditions for calculation of the design maximum temperature of conductors under this special loading and the maximum duration of such special loading within one year shall be defined in the Project Specification as well.

5.3 Insulation co-ordination

5.3.3 Determination of the co-ordination withstand voltage

5.3.3.5 Lightning performance of overhead lines

(ncpt) **CZ.1 Protection against atmospheric overvoltage**
Protection of overhead lines against atmospheric over-voltages is ensured by earth wires, appropriate earthing of supports or by surge arresters. The protection degree is to be selected in dependence on lightning ground flash density in regions, where the line is to be routed, and on the required allowable failure flashover rate of the line. The method of protection and requirements concerning its effectiveness should be determined in the Project Specification. Protection optimisation can be performed according to procedure given in the CIGRÉ publication Nº 63 (see NOTE in 5.3.3.5 of Part 1).

If the Project Specification does not define requirements, it is possible to select appropriate protection of the line according to ČSN 38 0810.

5.3.4 Determination of the required withstand voltage (U_{rw})

(ncpt) **CZ.1 Required withstand voltages**
Required withstand voltages are specified in Table 5.3.4/CZ1.

Table 5.3.4/CZ.1 – Required withstand voltages

Highest system voltage U_s (kV)	U_{rw50Hz} wet (kV)	U_{rwLI} dry (kV)	U_{rwSI} wet (kV)
123	230	550	–
245	460	1 050	–
420	–	1 425	1 050
420s [1)]	–	1 300	950

[1)] The reduced insulation level, which requires the application of surge arresters in the line for reduction of atmospheric and switching overvoltages.

(ncpt) **CZ.2 Required withstand voltages of insulator sets**
Also maximum allowable values of withstand voltages for insulator strings are given in Table 5.3.4/CZ.2. For insulator strings, selected as suitable in terms of strong pollution as longer ones than in terms of insulation co-ordination, the co-ordination spark gaps shall be used, which hold the withstand voltages in required limits, or external clearances to persons or buildings/objects shall be greater than $1{,}1 \cdot a_{som}$ (see 5.4.2.1 and 5.4.2.1/CZ.1).

Clause National regulation

Table 5.3.4/CZ.2 – Required withstand voltages of insulator sets

Highest system voltage U_s (kV)	U_{rw50Hz} wet (kV)	U_{rwLI} dry (kV)		U_{rwSI} wet (kV)	
		minimum	maximum	minimum	maximum
123	230	550	650	–	–
245	460	1 050	1 200	–	–
420	–	1 425	1 850	1 050	1 200
420s	–	1 300	1 700	950	1 100

Values of withstand voltages in Tables 5.3.4/CZ.1 and 5.3.4/CZ.2 apply to altitudes up to 1 000 m. For altitudes exceeding 1 000 m, the withstand voltages shall be corrected according to the equation:

$$U_{rwH} = U_{rw\,1000} \cdot \frac{K_{a\,1000}}{K_{aH}}$$

where U_{rwH} is the required withstand voltage for altitude $H > 1\,000$ m;

$U_{rw\,1000}$ is the required withstand voltage for altitude $H = 1\,000$ m;

K_{aH} is the altitude factor according to Table E.4 for the altitude $H > 1\,000$ m;

$K_{a\,1000}$ is the altitude factor according to Table E.4 for the altitude $H = 1\,000$ m.

5.3.5 Electrical clearance distances to avoid flashover

5.3.5.1 General

(ncpt) **CZ.1 Method to determine minimum air clearances**

For derivation of minimum air clearances, the method based on the long-term experience with clearances verified in operation, on calculation analyses according to Annex E and on results of experiments was used. Clearances are considered to be empirical.

5.3.5.3 Empirical method

(ncpt) **CZ.1 Minimum clearances D_{el} and D_{pp}**

Minimum clearances are specified in Table 5.5/CZ.1, which substitutes Table 5.5 in EN 50341-1.

Table 5.5/CZ.1 – Minimum clearances D_{el} and D_{pp}

Highest system voltage U_S (kV)	D_{el1} (m) external	D_{el2} (m) internal conductor – structure	D_{el3} (m) internal conductor – structure (in window)	D_{el4} (m) conductor – earth wire	D_{pp} [1] (m) internal and external conductor – conductor
123	1,0	1,0	1,1	1,0	1,2
245	2,0	1,9	2,0	1,8	2,2
420	3,0	2,6	3,2	2,5	3,7
420s	2,6	2,3	2,8	2,3	3,15

[1] Clearances between phase conductors of the same circuit and to conductors of another circuit or line of electrical system. For electric circuits of separate utilities, the Project Specification may determine greater clearances.

NOTE In 5.4 of EN 50341-1 and in EN 50341-3-19, the clearance D_{el} is represented by relevant clearances D_{el1}, D_{el2}, D_{el3} and D_{el4} according to this Table.

Clause National regulation

(ncpt) **CZ.2 Minimum clearances at power frequency voltage**

Minimum air clearances to withstand power frequency voltages (e.g. for application under extreme wind load according to 5.4.2.2.3/CZ.3) are specified in Table 5.3.5.3/CZ.1.

Table 5.3.5.3/CZ.1 – Minimum clearances $D_{50Hz_p_el}$ and $D_{50Hz_p_p}$

U_s (kV)	$D_{50Hz_p_e}$ (m)	$D_{50Hz_p_p}$ (m)
123	0,25	0,40
245	0,45	0,70
420	0,75	1,20

Values in Tables 5.5/CZ.1 and 5.3.5.3/CZ.1 apply to altitudes up to 1000 m. For altitudes higher than 1000 m, the withstand voltages are corrected according to E.2.5 and corresponding corrections of clearances are calculated according to equations in Table E.5 as the differences between values for withstand voltages at the altitude of 1 000 m and at the altitude *H*.

5.4 Internal and external clearances

5.4.1 Introduction

(ncpt) **CZ.1 Clearances of insulated conductors**

If a solid insulating layer is used around the phase conductors, some minimum internal and external clearances may be reduced. Reduced internal and external clearances shall be determined in the Project Specification taking care of the risk of electric shock or increased risk of damages of other equipment from electric current.

If supports are bearing bare conductors of circuits with rated voltages exceeding 45 kV AC together with insulated conductors of circuits with rated voltages ranging from 1 kV to 45 kV, clearances between conductors of various voltage levels shall be maintained as between bare conductors.

For determination of internal and external clearances for circuits with insulated conductors with rated voltages up to 45 kV, it is possible to use relevant provisions of ČSN 33 3301.

(ncpt) **CZ.2 Clearances to self-supporting dielectric cables**

Minimum clearances to self-supporting dielectric cables may be reduced accordingly. Reduced clearances shall be determined in the Project Specification.

NOTE When designing dielectric cables and their positioning on the supports, the influence of electric field strength shall be taken to account.

(ncpt) **CZ.3 Clearances for circuits up to 45 kV on combined lines**

In case of combined lines, internal clearances between conductors and between a conductor and an earthed part and external clearances according to ČSN 33 3301 apply to circuits with rated voltages up to 45 kV, however wind loads on conductors are considered according to 5.4.2.2.3/CZ.1. Minimum external clearances according to ČSN 33 3301 shall be maintained also in case of non-uniform ice load according to 5.4.2.2.2/CZ.2.

(ncpt) **CZ.4 Requirement to maintain clearances for the working life of a line**

Clearances, specified in subclause 5.4 including national provisions in EN 50341-3-19 shall be maintained for the entire period of design working life of the line, i.e. as in the initial state after installation of new conductors, as in the final state after elongation of conductors. It is therefore needed to take these circumstances into account when designing and erecting the line.

NOTE The initial state shall be taken into account especially when checking distances to objects, which the line undercrosses.

Clause National regulation

5.4.2 General considerations and load cases

5.4.2.1 General considerations and underlying principles

(ncpt) **CZ.1 Check of a_{som}**

If the withstand voltage of insulator sets is greater than that one in Table 5.3.4/CZ.2 due to pollution or for other reasons and where permanent objects/buildings are crossed (where human being may occur, allowance for its height shall be considered as well), it is necessary to verify that external clearances to objects or persons are greater than 110 % of the arcing distance a_{som}, where a_{som} is the minimum arcing distance of an insulator set or the minimum distance between live part and other earthed part of the support.

In this case a_{som} is investigated on both supports adjacent to the crossing span. Such check is performed for load cases according to 5.4.2.2.1/CZ.1, 5.4.2.2.1/CZ.3, 5.4.2.2.1/CZ.4 and 5.4.2.2.2/CZ.1.

5.4.2.2 Load cases for calculation of clearances

5.4.2.2.1 Maximum conductor temperature

(ncpt) **CZ.1 Design maximum temperature of phase conductors**

The design maximum temperature of phase conductors to check minimum clearances shall be specified in the Project Specification.

When determining the design maximum temperature of conductors, possible development in utilization of the line during the design working life needs to be considered. In case of lines, where the cross-section of phase conductors is mainly determined by the maximum transferred current (i.e. by thermal aspects), it is not therefore recommended to choose the design maximum temperature of conductors lower than 70°C.

Alternatively, it is admitted that the Project Specification should specify the highest phase current in a summer season and the highest phase current in another year season together with required conditions for calculations of conductor temperature, if appropriate, instead of the design maximum conductor temperature. In this case, the design maximum conductor temperature will be determined by a designer on the basis of data specified in the Project Specification. The design maximum conductor temperature has to be quoted in the Project Documents and namely in the longitudinal profile of the line.

When determining the design maximum conductor temperature, following conditions are usually considered:

- current in the phase conductor or sub-conductor of a bundle, corresponding to the maximum loading in the summer period;
- ambient temperature: + 35°C;
- wind speed: 0,5 m/s at an angle of incidence of 45° with respect to the conductor;
- global solar radiation: 1 000 W/m^2;
- absorptivity of conductor surface: 0,5;
- emissivity of conductor surface: 0,5.

When calculating the design maximum conductor temperature or the maximum transferred current, it is possible to consider more severe conditions, if required, or consider also other values of absorptivity and emissivity factors.

NOTE 1 The calculation of a conductor temperature under various conditions can be performed e.g. according to the CIGRÉ Study Committee 22 Report “The thermal behaviour of overhead conductors, Section 1 and 2”, published in the magazine ELECTRA Nº 144:1992.

The Project Specification may also determine the maximum short duration temperature of conductors or the maximum short-term special line loading above the normal level, e.g. in case of a fault in another point of the network. External clearances and internal clearances between circuits shall be maintained also under these conditions, unless the Project Specification determines smaller internal and even external clearances with regard to a short expected period of such utilization and to probability risk assessment, resulting from such reduced distances, especially with regard to safety of persons.

Clause National regulation

NOTE 2 It is not recommended to reduce the minimum external clearances for the maximum short duration temperature of conductors, if it is expected that a corresponding special load may last for more than 0,1 % of time during one year.

External and internal clearances are not checked in case of a specified power system fault (e.g. in case of a short-circuit), unless otherwise specified in the Project Specification. In such case, the Project Specification shall define also conditions for calculations and allowable clearances.

(ncpt) **CZ.2 Design maximum temperature of earth wires**

For earth wires and other conductors, which do not carry operational current, the design maximum conductor temperature is assumed to be + 40°C.

(ncpt) **CZ.3 Line with more circuits**

When verifying internal clearances between conductors of different circuits according to 5.4.3, the design maximum conductor temperature is considered for conductors of one circuit, and temperature equal to + 40°C for conductors of the other circuit, without any wind load.

(ncpt) **CZ.4 Crossings of overhead power lines**

When verifying clearances between conductors of two crossing lines according to 5.4.5.4/CZ.1, the design maximum conductor temperature is considered for conductors of the upper line, while the temperature of conductors of the lower line is taken as + 40°C,. without any wind load. If the upper line is the existing one, the Project Specification shall determine the design maximum temperature of its conductors.

5.4.2.2.2 Ice load for determination of electrical clearances

(ncpt) **CZ.1 Load case Ice load**

Conditions for verification of clearances under uniform ice load:

- conductor temperature of – 5°C;
- no wind load (still air conditions);
- characteristic ice load according to 4.2.3.2/CZ.1.

(ncpt) **CZ.2 Load case Non-uniform ice load**

Conditions for verification of clearances under non-uniform ice load :

- conductor temperature of – 5°C;
- no wind load (still air conditions);
- 40% of the characteristic ice load on conductors according to 4.2.3.2/CZ.1 only within the crossing span, in other spans conductors without any ice load.

This load case is used to check external clearances to crossed objects and areas according to 5.4.5.1/CZ.5 and 5.4.5.2/CZ.1.

In addition, this load case is used to check external clearances between different lines, and to check internal clearances between conductors according to following rules:

Application of non-uniform ice load for overhead line crossings (see 5.4.5.4/CZ.1):

Case A

Upper line: 40 % of the characteristic ice load on conductors according to 4.2.3.2/CZ.1 only within the crossing span; in other spans conductors without ice.

Lower line: conductors without ice.

Case B

Upper line: 40 % of the characteristic ice load on conductors according to 4.2.3.2/CZ.1 in all spans.

Lower line: Conductors without ice only within the crossing span; in other spans 40 % of the characteristic ice load on conductors according to 4.2.3.2/CZ.1.

Clause National regulation

NOTE 40 % of the characteristic ice load on conductors according to 4.2.3.2/CZ.1 corresponds approximately to the ice load with a three year return period. In case of a non-uniform ice load, movements of conductor attachment points in the direction of the line on all supports of the line section need to be taken into account.

Application of non-uniform ice load for parallel lines (see 5.4.5.4/CZ.2):

The same conditions as for crossing lines apply (*Cases A* and *B*), where any span in a close distance between parallel or converging lines is treated here as the crossing span.

Application of non-uniform ice load to internal clearances between conductors (see 5.4.3/CZ.3):

The same conditions as for crossing lines are valid (*Cases A* and *B*), where any span of the line is treated here as the crossing span.

5.4.2.2.3 Wind load for determination of electrical clearances

(ncpt) **CZ.1 Load case Wind load (except extreme wind load)**

Conditions for verification of clearances under design wind load:

- conductor temperatures both of – 5°C and + 30°C;
- wind load with a three year return period, i.e. 58 % of the characteristic wind load according to 4.2.2.4.1/CZ.1 and 4.2.2.4.2;
- no ice load.

NOTE The conductor temperature of – 5°C may be critical when checking internal phase-to-earth clearances and external clearances in the case of undercrossing. The temperature of + 30°C is mostly decisive when checking other external clearances.

(ncpt) **CZ.2 Load case Unequal wind loads**

Conditions for verification of clearances between conductors under unequal wind loads:

- conductor temperatures both of – 5°C and + 30°C;
- no ice load;
- wind force acting on one conductor due to wind, blowing in direction perpendicular to the conductor; corresponding to wind pressure from 0 to the dynamic wind pressure q_h with a three year return period (this design maximum dynamic wind pressure corresponds to 58 % of wind force on the conductor according to 4.2.2.4.1/CZ.1);
- simultaneously, wind force acting on the other conductor due to wind, blowing in the same direction as to the first conductor, corresponding to a dynamic wind pressure q_h always by 36 % lower than the wind pressure acting on the first conductor.

This load case is used to check internal clearances between phase conductors, between phase conductor and earth wire or to other conductors and cables eventually (see 5.4.3/CZ.2), and to check external clearances between conductors of different crossing lines and/or parallel lines (see 5.4.5.4/CZ.1 and 5.4.5.4/CZ.2).

NOTE When verifying clearances between out of parallel conductors, it is necessary to take into account the influence of an angle of incidence Ω for the wind load on the conductor, to which wind direction is not perpendicular.

(ncpt) **CZ.3 Load case Extreme wind load**

Conditions for verification of clearances under extreme wind load:

- conductor temperatures both of – 5°C and + 30°C;
- wind load with a fifty year return period, i.e. the characteristic wind load on conductor according to 4.2.2.4.1/CZ.1 and characteristic wind load on insulator set according to 4.2.2.4.2;
- no ice load.

This load case is used to check internal clearances according to 5.4.3.

(ncpt) **CZ.4 Load case Mild wind load**

Conditions for verification of clearances under mild wind load:

- conductor temperatures both of – 5°C and + 30°C;

Clause National regulation

– no ice load;
– wind load, corresponding to dynamic wind pressure q_h ranging from 0 to 62,5 N/m^2, where the value of gust response factor G_q is taken as equal to 1,0 in this case.

This load case is used to check internal phase–to–earth clearances according to 5.4.3/CZ.2 only.

NOTE The mentioned dynamic wind pressure corresponds to the wind speed of 10 m/s.

(ncpt) **CZ.5 Load case Minimum conductor temperature**
The design minimum conductor temperature to check clearances is assumed to be – 30°C and is considered without any ice and/or wind load.

This load case is used to check internal clearances according to 5.4.3/CZ.2 and to check external clearances in case of undercrossing according to 5.4.5.3 and 5.4.5.4/CZ.1.

5.4.2.2.4 Combined wind and ice loads

(ncpt) **CZ.1 Load case Combined wind and ice load**
Conditions for verification of clearances under combined wind and ice load:

– conductor temperature of – 5°C;
– characteristic ice load on conductors according to 4.2.3.2/CZ.1;
– reduced wind load according to 4.2.4.1/CZ.1, 4.2.4.2/CZ.1, 4.2.4.3/CZ.1 and 4.2.4.4/CZ.1.

In this load case, the same minimum clearances from the surface of ice covered conductors as in case of design wind load according to 5.4.2.2.3/CZ.1 apply.

(ncpt) **CZ.2 Load case Combined ice and unequal wind loads**
Conditions for verification of clearances under combined ice and unequal wind loads:

– conductor temperature of – 5°C;
– characteristic ice load on conductors according to 4.2.3.2/CZ.1;
– wind force acting on one ice covered conductor due to wind, blowing in direction perpendicular to the conductor, calculated according to 4.2.4.5/CZ.1, corresponding to wind pressure from 0 to the dynamic wind pressure on an ice covered conductor q_{hcl} according to 4.2.4.3/CZ.1;
– simultaneously, wind force acting on the other ice covered conductor due to wind, blowing in the same direction as to the first conductor, calculated according to 4.2.4.5/CZ.1, corresponding to the dynamic wind pressure on an ice covered conductor q_{hcl} always by 36 % lower than the dynamic wind pressure q_{hcl} acting on the first conductor.

This load case is used to check internal clearances between phase conductors and between phase conductor and earth wire, or to other conductors and cables eventually (see 5.4.3/CZ.2), and to check external clearances between conductors of different crossing or parallel lines (see 5.4.5.4/CZ.1 and 5.4.5.4/CZ.2).

NOTE When verifying clearances between out of parallel conductors, it is necessary to take into account the influence of an angle of incidence Ω for the wind load on the ice covered conductor, to which wind direction is not perpendicular.

5.4.3 Clearances within the span and at the tower

(ncpt) **CZ.1 Reduction factor for minimum internal clearances**
In load case “Wind load except extreme wind load” according to 5.4.2.2.3/CZ.1, where reduction of basic minimum internal clearances between live parts D_{pp} or between live and earthed parts D_{el} (see Table 5.4.3) is allowed, these basic minimum clearances are multiplied by a reduction factor k_1 = 0,6, unless the Project Specification determines more severe requirements for distances between phase conductors of different circuits, i.e. $0{,}6 < k_1 \leq 1$.

The application of a reduction factor k_1 for minimum internal clearances in other load cases – see 5.4.3/CZ.2 and 5.4.3/CZ.3.

Clause National regulation

NOTE In various load cases, various values of a reduction factor k_1 are allowed.

(ncpt) **CZ.2 Other load cases for clearances within the span and at the support**

For the load case “Mild wind load” according to 5.4.2.2.3/CZ.4, the same clearances as given in Table 5.4.3 for the load case “Maximum conductor temperature” apply.

For the load case “Minimum conductor temperature” according to 5.4.2.2.3/CZ.5, reduced clearances as given in Table 5.4.3 for the load case “Wind load except extreme wind load” apply (k_1 = 0,6) except of clearances between phase conductors of different circuits, where unreduced clearances as for the load case “Maximum conductor temperature” apply.

For load cases “Unequal wind loads” according to 5.4.2.2.3/CZ.2, “Combined wind and ice load” according to 5.4.2.2.4/CZ.1 and “Combined ice and unequal wind loads” according to 5.4.2.2.4/CZ.2, reduced clearances as given in Table 5.4.3 for the load case “Wind load except extreme wind load” apply (k_1 = 0,6), unless the Project Specification determines more severe requirements for clearances between phase conductors of different circuits, i.e. $0{,}6 < k_1 \leq 1$.

The Project Specification may require greater clearances between conductors of different circuits, if it is not possible to switch off other circuits, when working on one circuit of double or multi-circuit line.

(ncpt) **CZ.3 Clearances between conductors within the span under non-uniform ice load conditions**

The load case to check in-span clearances between conductors under non-uniform ice load conditions is specified in 5.4.2.2.2/CZ.2.

Clearances between phase conductors and earth wires and between phase conductors of the same circuit are not checked in this load case, unless otherwise specified in the Project Specification. If the verification of clearances between conductors under non-uniform ice load conditions is required, basic internal clearances D_{pp} and D_{el} may be reduced by multiplying by a reduction factor k_1, value of which shall be specified in the Project Specification.

If circuits of separate utilities are placed on common supports, clearances between conductors of circuits of separate utilities under non-uniform ice load conditions may not be shorter than D_{pp}. If utilities should agree, a minimum clearance D_{pp} may be reduced by multiplying by a reduction factor k_1, value of which shall be determined in the Project Specification. However, value of k_1 shall not be lower than 0,6.

The Project Specification has to determine, whether the verification of internal clearances between conductors of different circuits of the same utility under non-uniform ice load conditions according to 5.4.2.2.2/CZ.2 is required or not. If such verification is required, the minimum clearance D_{pp} may be reduced by multiplying by a reduction factor k_1, value of which shall be specified in the Project Specification. The value of a reduction factor k_1 of 0,6 is recommended in this case.

(ncpt) **CZ.4 Verification of minimum clearances between conductors within the span according to the empirical relation**

Between phase conductors, between phase conductors and earth wires, and between phase conductors of separate circuits, at least a distance b_{emp} according to following equations has to be maintained in mid-span under the conditions, for which the conductor sag f is specified:

$$b_{emp} = k_{emp} \cdot \sqrt{f + L_{ins}} + c_{emp} \cdot D_{pp}$$ between phase conductors and to conductors of separate circuits;

$$b_{emp} = k_{emp} \cdot \sqrt{f + L_{ins}} + c_{emp} \cdot D_{el4}$$ between a phase conductor and an earth wire

where

b_{emp} is the minimum clearance between two conductors or bundles in the middle of the span (m);

Clause National regulation

f is the greater one of conductor sags (m) in still air at the conductor temperature of + 40°C or at a temperature of − 5°C and at the reference ice load on conductors according to 4.2.3.2/CZ.1;

L_{ins} is the vertical length of the suspension insulator set, or vertical length of that its part, which may swing in direction perpendicular to the line (m). If lengths of insulator sets on both supports of the span are different, their arithmetic mean is put into the equation. For insulator sets, which cannot swing in the direction perpendicular to the line axis, and for insulator cross-arms L_{ins} = 0 is taken;

D_{pp} is the minimum clearance "conductor–conductor" according to Table 5.5/CZ.1. When checking clearances between phase conductors of different circuits operating at different rated voltages, the distance D_{pp} corresponding to the higher voltage shall be taken.

D_{el4} is the minimum clearance "conductor–earth wire" according to Table 5.5/CZ.1;

c_{emp} is the constant. For verification of internal clearances c_{emp} = 0,6 is taken;

k_{emp} is the factor depending on conductor weight and mutual position of both conductors according to formula

$$\mathbf{k}_{emp} = 0{,}54 + \frac{(1+\mathbf{d}/\mathbf{g}_c)}{200} \cdot \left[5{,}7 - 2{,}1 \cdot \left(1 + \frac{\delta}{50}\right) \cos 2\delta + 0{,}5 \sin 2\delta \right]$$

where:

d is the diameter of the conductor or sub-conductor in a bundle (mm);

g_c is the weight of the conductor or one sub-conductor of the bundle per 1 m of the length ($N \cdot m^{-1}$);

δ is the angle, which is formed by the horizontal plane and the straight line, determined by points of intersection of axes of both conductors (or bundles) with a plane perpendicular to the line in the middle of the span (see Figure 5.4.3/CZ.1). It is given in degrees (°) ranging from 0° to 90°.

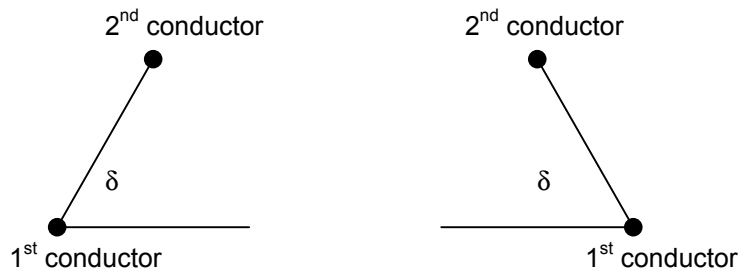

Figure 5.4.3/CZ.1 – Angle between conductors

If values of k or ($f + L_{ins}$) are different for both conductors, the greater of clearances b_{emp} is decisive, as calculated for both conductors.

NOTE 1 The above-specified relation may be used to check minimum clearances between conductors also in other points of the span than in the middle of the span. In this case, it is necessary to put into equation a sag f_r in the checked point of the span, constant k_{emp_r}, calculated for the angle δ_r in checked point of the span, and in the case that lengths of suspension insulator sets on both supports are not the same, than the equivalent length L_{ins_r}, calculated from the following equation:

$$L_{ins_r} = L_{ins1} + (L_{ins2} - L_{ins1}) \,.\, r / L$$

where L_{ins1} is the length of a shorter insulator set (m);

L_{ins2} is the length of a longer insulator set (m);

L is the span length (m);

r is the horizontal distance between the attachment point of the shorter insulator set and the point in the span, where the distance between conductors is checked (m).

If insulator sets, which cannot swing in direction perpendicular to the line, or insulator cross−arms are installed on one of the supports (or on both supports) of the checked span, then L_{ins1} (and/or L_{ins2}) = 0.

Clause National regulation

The minimum clearances b_{emp} between conductors within the span, calculated according to the above-specified empirical relations, however, may not be shorter than the minimum clearance between conductors D_{pp}, or D_{el4} respectively, according to Table 5.5/CZ.1 in 5.3.5.3/CZ.1.

NOTE 2 However, the above specified verification of clearances between conductors within the span according to empirical relations does not substitute the verification of internal clearances between conductors according to 5.4.3, 5.4.3/CZ.1, 5.4.3/CZ.2 and 5.4.3/CZ.3.

5.4.4 Clearances to ground in areas remote from buildings, roads, railways and navigable waterways

(ncpt) **CZ.1 Clearances under combined wind and ice load conditions**
For the load case "Combined wind and ice load" according to 5.4.2.2.4/CZ.1 the same minimum clearances as given in Table 5.4.4 for the load case "Wind load" apply.

(A-dev) **CZ.2 Conditions for growing of stands**
Conditions for growing of stands in the vicinity of power lines are determined in Act N° 458/2000 Coll., on Conditions of Enterprise and on Performance of State Administration in Power Industries.

(ncpt) **CZ.3 Restriction for heights of trees**
The Project Specification may require (e.g. for lines, where high operational reliability is required) to fell trees to such distance from the line or to trim them so that they should not touch conductors, if falling or uprooted.

The distance is then determined according to the following formula:

$$D_{tr} = \sqrt{H_{tr}^{2} - h_{c_tr}^{2}}$$

where D_{tr} is the horizontal distance of a tree trunk from the most endangered conductor [m];

H_{tr} is the height of a tree with inclusion of its future growth [m];

h_{c_tr} is the height of the most endangered conductor above the horizontal plane of the tree base, under the greatest sag conditions according to 5.4.2.2.1/CZ.1 and 5.4.2.2.2/CZ.1. The height of the conductor is measured in a vertical plane perpendicular to the conductor and passing through the tree base.

5.4.5 Clearances to buildings, traffic routes, other lines and recreational areas

5.4.5.1 General

(A-dev) **CZ.1 Line crossing roads or adjacent to roads**
Conditions for contacts of the line with motorways, national and local roads are handled in Road Act N° 13/1997 Coll., in Regulation of the Ministry of Transport N° 104/1997 Coll., by which the Road Act is implemented (see e.g. 5.4.5.3/CZ.1), and in this standard.

(A-dev) **CZ.2 Line crossing railways or adjacent to railways**
Conditions for contacts of the line with railways are given in Railway Act N° 266/1994 Coll. (see e.g. 5.4.5.3/CZ.5) and in this standard.

(A-dev) **CZ.3 Line crossing navigable waterways or adjacent to navigable waterways**
Conditions for contacts of the line with navigable waterways are given in Inland Navigation Act N° 114/1995 Coll., in Regulation of the Ministry of Transport N° 222/1995 Coll. on waterways (see e.g. 5.4.5.3/CZ.7) and in this standard.

(A-dev) **CZ.4 Line protection zone**
Act N° 458/2000 Coll. on Conditions for Enterprise and on Performance of State Administration in Power Industries determines a protection zone along power lines, in which some activities are prohibited (see e.g. 5.4.4/CZ.2, 5.4.5.2/CZ.3).

Clause National regulation

(ncpt) **CZ.5 Other load cases for minimum clearances to buildings, roads, other lines and recreational areas**

In addition to load cases, specified in relevant Tables in subclause 5.4.5 of Part 1 of this standard, load cases “Non–uniform ice load” according to 5.4.2.2.2/CZ.2 and “Combined wind and ice load” according to 5.4.2.2.4/CZ.1 are considered. For the load case “Non–uniform ice load” the same minimum clearances as for the load case “Ice load” apply, unless otherwise specified in the following subclauses. For the load case “Combined ice and wind load” the same minimum clearances as for the load case “Wind load” apply.

(ncpt) **CZ.6 Application of double and multiple insulator sets**

Double or multiple insulator sets shall be used on both supports limiting the spans, where the line crosses buildings, normal use of which is connected with presence of persons, and spans, where the line crosses railways, roads (except national roads classified in the 3rd category, local/country roads of the 3rd and 4th category and tertiary (special-purpose) roads), recognised navigable waterways, recreational and sports areas, low voltage overhead power lines and overhead telecommunication lines.

The Project Specification may require application of double or multiple insulator sets also in other cases.

(ncpt) **CZ.7 Mid-span conductor joints**

In spans, where the line crosses buildings, normal use of which is connected with presence of persons, and in spans, where the line crosses national roads, local roads of the 1st or 2nd category, monitored navigable waterways or recreational and sports areas, only one mid–span tension joint may occur in each single conductor or in bundle sub-conductor.

In spans, where line crosses railways, motorways or speedways, splicing of conductors is not permitted.

The Project Specification may limit in-span splicing of conductors also in other cases, or for the whole line respectively.

When a new line is constructed, no span, where splicing of conductors is allowed, may contain more then one joint in each single conductor or in bundle sub-conductor.

5.4.5.2 Residential and other buildings

(ncpt) **CZ.1 Non-uniform ice load conditions**

For the load case “Non-uniform ice load”, minimum clearances to antennas or lightning protection facilities, and minimum clearances to street lamps, advertising signs and similar structures, which can not be stood on, specified in 5.4.5.2, are reduced by 2 m.

(ncpt) **CZ.2 Minimum clearance to structure when falling towards line conductors**

The clearance $D_{50Hz_p_e}$ between the conductor and the structure shall be maintained when the structure falls towards line conductors. This condition is checked only for load cases “Maximum conductor temperature” and “Ice load”.

This provision substitutes the relevant remark in Table 5.4.5.2.

(A-dev) **CZ.3 Restrictions in the line protection zone**

(§ 46 of Act N° 458/2000 Coll. on Conditions of Enterprise and on Performance of State Administration in Power Industries)

In the line protection zone, it is prohibited to build, without line owner’s approval, any buildings and/or structures or other similar equipment, and to store explosives and combustibles. The Act also stipulates activities, which are prohibited in line protection zones.

(ncpt) **CZ.4 Buildings and structures in the line protection zone with a line owner’s approval**

If the owner of the line issues a written approval for location of a building or structure in the line protection zone, minimum clearances specified in 5.4.5.2, 5.4.5.2/CZ.1 and 5.4.5.2/CZ.2 apply, unless the owner of the line stipulates more severe conditions.

No fuel filling station may be placed in the line protection zone.

Clause National regulation

(ncpt) **CZ.5 Fire resistance**

Roofs built of non-combustible or heavy combustible materials according to ČSN 73 0862 are considered as roofs resistant to fire.

Roofs built of hardly, medium and easily combustible materials according to ČSN 73 0862 are considered as roofs non-resistant to fire.

5.4.5.3 Traffic routes

(A-dev) **CZ.1 Contacts of power lines with roads**

Supports of the line shall not be placed on a road land and on a road auxiliary land, defined in the Road Act N° 13/1997 Coll.

No buildings/objects, which could obstacle free view, needed for road safety, can be built in the road protection zone inside sweep of national road and inside sweep of local road of the 1st or 2nd category with radius up to 500 m inclusive and in deltoid fields of vision at level crossings (Road Act N° 13/1997 Coll.).

Other details on contacts of power lines with roads are specified in the cited Road Act N° 13/1997 Coll. and in the Regulation of the Ministry of Transport N° 104/1997 Coll., which implements the Road Act.

(ncpt) **CZ.2 Other requirements for contacts of power lines with roads**

It is recommended to consult any intended location of the line support in a road protection zone with the respective office, which is authorised to act as a road administrative authority.

(ncpt) **CZ.3 Additional requirements for contacts of power lines with motorways and speedways**

CZ.3.1 Clearance of the support to motorways or speedways

The horizontal distance of the nearest part of the support to the below specified part of motorway or speedway in the terrain level of the given part of road shall be at least:

9 m to inside edge of an unconsolidated verge,

7,5 m to inside edge of a side ditch,

2,5 m to road embankment footing or to outside edge of a side ditch.

CZ.3.2 Lay-out

It is not recommended to design line crossings over motorways and speedways across areas of flyover junctions.

(ncpt) **CZ.4 Minimum clearances of conductors to local and special-purpose roads**

The minimum clearances to a surface of crossed roads specified in Table 5.4.5.3.1 are reduced by 1 m in case of tertiary (special-purpose) roads and local roads of the 4th category. The load case “Non-uniform ice load” according to 5.4.2.2.2/CZ.2 is not considered in this case.

(A-dev) **CZ.5 Building in railway protection zone**

In railway protection zone it is possible to build and operate constructions only with an approval of the railway administration authority and under conditions determined by such authority (Railway Act N°.266/1994 Coll.).

(ncpt) **CZ.6 Additional requirements for crossing railway**

In the line section, in which the line crosses national or regional railway, maximum three other intermediate supports may be admitted between two section supports or between one section (or terminal) support and the structure of a substation. The line angles at these supports shall not be greater than 10°.

(A-dev) **CZ.7 Clearances to waterways significant in terms of shipping transport**

Minimum heights of conductors above the highest navigable water level of waterways significant in terms of transport for vessels with a carrying-capacity up to 300 metric tones and above 300 metric tones depending on a rated voltage of the line are specified in the Regulation of the Ministry of Transport N° 222/1995 Coll. on Waterways.

Clause National regulation

The load case “Non-uniform ice load” 5.4.2.2.2/CZ.2 does not apply to clearances to waterways.

The list of waterways significant in terms of transport is included in the Inland Navigation Act N° 114/1995 Coll.

Classification of waterways is specified in the Regulation of the Ministry of Transport N° 222/1995 Coll. on Waterways.

Overhead power lines shall not be routed over a lock (lock chamber with docks and weir) and in its vicinity.

(ncpt) **CZ.8 Clearances to other waterways and water areas**

Minimum heights of conductors above the water level under the highest and normal water stages are specified in the following Table 5.4.5.3/CZ.1.

Table 5.4.5.3/CZ.1 – Minimum height of conductors above other waterways and water areas

	Minimum conductor height above water level	
Load Case	Normal water stage	Highest water stage
Maximum conductor temperature	5 m + D_{el}	4 m + D_{el}
Ice load	5 m + D_{el}	4 m + D_{el}
Wind load	5 m + D_{el}	4 m + D_{el}
Load case “Non-uniform ice load” does not apply to clearances to waterways and water areas.		
As a normal water stage, it is considered a water level corresponding to flow rate of 180 day return period in a natural water stream or corresponding to the design flow rate in an artificial water stream. The highest water stage is a water level corresponding to flow rate of 50 year return period in a water stream. NOTE Hydrological information are made available by regional branches of Czech Hydro-meteorological Institute.		

(ncpt) **CZ.9 Crossing over permanent ski lifts**

For crossings of a line over permanent ski lifts, the same requirements as for crossings over ropeways are valid.

5.4.5.4 Other power lines and overhead telecommunication lines

(ncpt) **CZ.1 Minimum clearances to other overhead power lines and overhead telecommunication lines**

Table 5.4.5.4 is substituted by the Table 5.4.5.4/CZ.1.

(ncpt) **CZ.2 Parallel lines**

For minimum clearances between lines, the values specified in Table 5.4.5.4./CZ.1 apply. If supports of parallel lines are placed on the same or approximately the same levels, clearances according to 5.4.3/CZ.4 shall be maintained simultaneously, where the value of a constant c_{emp} is taken as 1,0.

Clause National regulation

Table 5.4.5.4/CZ.1 – Minimum clearances to other overhead power lines and overhead telecommunication lines

Load Case	Crossing of power lines exceeding 1 kV		Crossing of telecommunication lines and power lines up to 1 kV	
	Minimum clearance between conductor of the upper line and conductor of the lower line	Minimum clearance between conductor of one line and a support of the other line	Minimum clearance between conductor of the upper line exceeding 45 kV and conductor of the lower line	Minimum clearance between conductor of the upper line exceeding 45 kV and a support of the lower line
5.4.2.2.1/CZ.4	D_{pp} + 0,6	D_{el1} + 2	D_{el1} + 2	D_{el1} + 3
5.4.2.2.3/CZ.5	D_{pp} + 0,6	–	–	–
5.4.2.2.2/CZ.1	D_{pp} + 0,6	D_{el1} + 2	D_{el1} + 2	D_{el1} + 3
5.4.2.2.2/CZ.2	D_{pp}	D_{el1} + 1	D_{el1} + 1	D_{el1} + 1
5.4.2.2.3/CZ.1	D_{pp} + 0,6	D_{el1} + 2	D_{el1} + 2	D_{el1} + 3
5.4.2.2.3/CZ.2	D_{pp} + 0,6	D_{el1} + 2	D_{el1} + 2	D_{el1} + 3
5.4.2.2.4/CZ.1	D_{pp} + 0,6	D_{el1} + 2	D_{el1} + 2	D_{el1} + 3
5.4.2.2.4/CZ.2	D_{pp} + 0,6	D_{el1} + 2	D_{el1} + 2	D_{el1} + 3
Remark	D_{pp} is the greater of the values of D_{pp} for the two lines			

5.5 Corona effect

5.5.1 Radio noise

5.5.1.3 Noise limits

(ncpt) **CZ.1 Maximum permissible levels of radio noise**

Measurement methods, evaluation procedures and limits of high-frequency noise ranging from 0,15 MHz to 30 MHz and from 30 MHz to 1000 MHz are specified in national annex NA to CISPR 18-2 (in ČSN CISPR 18-2).

5.6 Electric and magnetic fields

5.6.1 Electric and magnetic fields under a line

(A-dev) **CZ.1 Limit values for power frequency electric and magnetic field strength in general**

Power frequency electric field strength and magnetic flux density may not exceed limits specified in the Decree of the Government on health protection against non-ionizing radiation N° 480/2000 Coll.

(ncpt) **CZ.2 Limit values for power frequency electric and magnetic field strength near overhead line**

Power frequency electric field strength and magnetic flux density near power facilities may not exceed limits specified in ČSN 33 2040.

5.6.2 Electric and magnetic field induction

(ncpt) **CZ.1 Effects upon steel pipelines**

Dangerous influences on buried insulated steel pipelines are handled in ČSN 33 2165.

Clause National regulation

(ncpt) **CZ.2 Effects on interlocking circuits and plants of railways**
The protection of interlocking circuits and plants of national and regional railways against endangering influences of power lines is regulated by the mutual agreement of the former Federal Ministry of Transport and the former Federal Ministry of Fuels and Power Industry Ref. N° FMPE 994/11, of August 1981.

(ncpt) **CZ.3 Earthing of items near overhead line**
Structures of ski lifts and conveyors and bare overhead metal pipelines shall be earthed before and behind crossing according to ČSN 34 1390.

Conductive fences and wire structures of vineyards and hop-fields under and near an overhead line with a rated voltage exceeding 110 kV shall be earthed by the maximum resistance to earth not exceeding 500 Ω.

Conductive structures crossed by a line with a rated voltage exceeding 110 kV shall be earthed according to ČSN 34 1390.

5.6.3 Interference with telecommunication circuits

(ncpt) **CZ.1 Protection of telecommunication lines**
The protection of telecommunication circuits against dangerous effects of power lines are dealt with in ČSN 33 2160.

6 Earthing systems

6.2 Dimensioning of earthing systems at power frequency

6.2.1 General

(ncpt) **CZ.1 Data for dimensioning of earthing systems**
The Project Specification shall include following data for dimensioning of earthing systems and earth wires :

- values of maximum one-phase short-circuit current depending on the earth fault locations for the whole length of the line;
- contributions of sum of maximum zero-sequence currents $3I_0$ to the earth fault location from both ends of the line depending on the earth fault locations for the whole length of the line;
- short-circuit time (depending on the earth fault locations).

6.2.2 Dimensioning with respect to corrosion and mechanical strength

6.2.2.2 Earthing and bonding conductors

(ncpt) **CZ.1 Application of aluminium and aluminium alloys**
Application of aluminium and aluminium alloys for earth electrodes and bonding conductors under ground surface is not permitted.

6.2.4 Dimensioning with regard to human safety

6.2.4.1 Permissible values

(ncpt) **CZ.1** Values of permissible touch voltages U_{Tp} are given in Table G.8. A value for a fault duration t_F, which is not given in Table G.8, may be obtained using interpolation. Values of voltage difference U_D acting as a source voltage in the touching circuit with a limited value that guarantees the safety of a person when using additional known resistances can be determined using calculation method given in G.4.2.

Clause National regulation

6.2.4.2 Measures for the observance of permissible touch voltage

(ncpt) **CZ.1 Support surroundings rarely occupied by people**

As support surroundings, which are not frequently occupied by people in terms of Note (2) in 6.2.4.2, following locations are considered:

a) points in un-built (open) areas (e.g. fields) at distances exceeding 10 m from outer edge of a motorway, road and local road;

b) points at distances exceeding 50 m from residential and civic estate;

c) points outside build-up area, at distances exceeding 25 m from individual detached houses and industrial buildings;

d) points at distances exceeding 50 m from boundaries of open recreational and sport grounds outside build-up area (e.g. fitness parks, sport-grounds, playing-fields, parks etc.);

e) dirt tracks and forest roads.

NOTE In ČSN 33 2000-4-41, locations, which are not frequently accessed by people, are called as remote locations.

If the line is provided with immediate automatic disconnection of supply according to 6.2.4.2/CZ.2, limits of touch voltages at these locations need not be considered in those cases where earth electrodes of the support do not reach to a greater distance than 15 m from accessible parts of the support.

(ncpt) **CZ.2 Immediate automatic disconnection of supply**

As immediate automatic disconnection of supply in terms of remark (3) in 6.2.4.2 any automatic disconnection of supply by the main protection up to 1 second and by the stand-by protection up to 5 second is considered.

(ncpt) **CZ.3 Protective measures**

If the line is provided with immediate automatic disconnection of supply according to 6.2.4.2/CZ.2 and a support is placed at a location, which is frequently occupied by people, values of touch voltages need not be checked, if at least one of following measures is applied:

– ground surface around the support is insulated up to a minimum distance of 1,5 m from a metal structure by a durable and hard-wearing insulation layer, e.g. made of bitumen mix with a minimum thickness of 10 cm. Earth electrodes may not protrude outside the insulation layer;

– support is enclosed by a non-conductive fence or by a wire fence covered with non-conductive plastic material (even with conductive posts).

(ncpt) **CZ.4 Combined lines**

For combined lines, requirements of ČSN 33 2000-4-41 shall be fulfilled as well.

6.3 Construction of earthing systems

6.3.2 Transferred potentials

(ncpt) **CZ.1 Protection of equipment against dangerous effects**

Protection of telecommunication cable lines and equipment against galvanic effects of overhead power lines with rated voltages exceeding 45 kV AC is performed according to ČSN 33 2160.

Protection of telecommunication lines and steel insulated pipelines – see 5.6.2/CZ.1, 5.6.2/CZ.2 and 5.6.3/CZ.1.

6.4 Earthing measures against lightning effects

(ncpt) **CZ.1 Prevention from backflashovers**

In order to prevent backflashovers, the line is protected by earthing of earth wires and of any all–metal supports.

Clause National regulation

Unless otherwise specified in the Project Specification, it is accepted that a line is sufficiently prevented from backflashovers, if requirements specified in this subclause are met.

All-metal supports with concrete foundations in a common line route at locations with the soil resistivity up to 150 Ω·m (up to 100 Ω·m in case of supports at a distance up to 800 m of a substation) are considered as reliably earthed through their foundation pads and no purpose-made earth electrodes need to be installed.

Resistances to earth of individual supports (with an earth wire disconnected) should not exceed, under favourable soil conditions, following limits

- for lines with rated voltages of 220 kV and 400 kV and for lines with a rated voltage of 110 kV in regions with lower lightning ground flash densities (less than 3 thunderstrokes per year·km^2)
  - 15 Ω for supports in a common line route;
  - 10 Ω for supports at a distance up to 800 m of a substation;
- for lines with a rated voltage of 110 kV in regions with higher lightning ground flash densities (more than 3 thunderstrokes per year·km^2) and for lines with higher operational reliability requirements:
  - 10 Ω for supports in a common line route;
  - 7 Ω for supports at a distance up to 800 m of a substation.

NOTE Data on thunderstorm activities shall be specified in the Project Specification.

Higher values of the resistance to earth may only be allowed under unfavourable soil conditions. The maximum values of the resistances to earth of individual supports in a common line route should not to exceed values shown in Table 6.4/CZ.1

Table 6.4/CZ.1 – Maximum values of resistance to earth

Soil resistivity Ω·m		Resistance to earth Ω
from	to	
500	1000	20
1000	2000	30

If the value of resistance to earth of an individual support of a line equipped with an earth wire exceeds limits given in Table 6.4/CZ.1 and if it is not possible to meet given limit in a usual manner, the resistance to earth of maximum three consecutive supports may be up to 50 Ω provided the resistances to earth of several adjacent supports are according to this table.

If it is not possible to ensure the values of resistance to earth of supports from exceeding the above-specified limits, further measures have to be agreed between the contractor and customer.

In case of combined lines, a higher rate of backflashovers in circuits with rated voltages up to 45 kV needs to be taken to account.

7 Supports

7.3 Lattice steel towers

7.3.4 Serviceability limit states

(ncpt) **CZ.1** For verification at serviceability limit states, loads resulting from the load cases defined in 4.2.10.2/CZ.3 in conjunction with the partial factors for actions according to 4.2.11/CZ.2 are used.

Clause National regulation

For forces resulting from the load cases specified hereinafter, the deflection of the tower tip may not be greater than following limits:

- suspension towers 4% of tower height above foundation for load cases 1a, 1b, 3,
- tension towers 2% of tower height above foundation for load cases 1a, 1b, 2a.

The Project Specification may specify other load cases and respective performance criteria at serviceability limit states.

7.3.5 Ultimate limit states

7.3.5.1 Basis

7.3.5.1.1 General

(ncpt) **CZ.1** For verification at ultimate limit states, loads resulting from the load cases defined in 4.2.10.2/CZ.1 and 4.2.10.2/CZ.2 in conjunction with the partial factors for actions according to 4.2.11/CZ.1 or according to 4.2.11/CZ.3, 4.2.11/CZ.4 or 4.2.11/CZ.5 respectively are used. Following partial safety factors for material property γ_M shall be used:

- resistance of cross-sections $\gamma_{M1} = 1{,}15$
- resistance of members to buckling $\gamma_{M1} = 1{,}15$
- resistance of net cross-sections at bolts holes $\gamma_{M2} = 1{,}30$

Unless otherwise specified in the Project Specification, the partial safety factor for a material property γ_M for members, forming the part of steel structure of above-ground of tower footings, shall be multiplied by a strength co-ordination factor of 1,5 (see 3.2.5 and 3.2.5/CZ.1).

7.3.6 Connections

7.3.6.1 Basis

7.3.6.1.1 General

(ncpt) **CZ.1** Following partial safety factors for a material property γ_M shall be used:

- resistance of bolted connections $\gamma_{Mb} = 1{,}45$
- resistance of riveted connections $\gamma_{Mr} = 1{,}45$
- resistance of welded connections $\gamma_{Mw} = 1{,}50$

7.3.6.2 Connection with bolts

(ncpt) **CZ.1** Bolted connections, by which inclined or horizontal bracing members are attached to leg members or gussets, shall be secured against dismantling up to a minimum height of 2,5 m above foundation, for example through application of special bolts and nuts. Details may be determined in the Project Specification.

7.4 Steel poles

7.4.4 Serviceability limit states

(ncpt) **CZ.1** For verification at serviceability limit states, loads resulting from the load cases defined in 4.2.10.2/CZ.3 in conjunction with the partial factors of actions according to 4.2.11/CZ.2 are used.

For forces resulting from the load cases specified hereinafter, the deflection of the tower tip may not be greater than following limits:

- suspension towers 4% of tower height above foundation for load cases 1a, 1b, 3,
- tension towers 2% of tower height above foundation for load cases 1a, 1b, 2a.

Clause National regulation

The Project Specification may specify other load cases and respective performance criteria at serviceability limit states.

7.4.5 Ultimate limit states

7.4.5.1 Basis

(ncpt) **CZ.1** For verification at ultimate limit states, loads resulting from the load cases defined in 4.2.10.2/CZ.1 and 4.2.10.2/CZ.2 in conjunction with the partial factors for actions according to 4.2.11/CZ.1 or according to 4.2.11/CZ.3, 4.2.11/CZ.4 or 4.2.11/CZ.5 respectively are used. Following partial safety factors for material property γ_M shall be used:

- resistance of cross-sections $\gamma_{M1} = 1{,}15$
- resistance of net sections at bolts holes $\gamma_{M2} = 1{,}30$

7.4.6 Connections

7.4.6.1 Basis

(ncpt) **CZ.1** Partial safety factors for a material property γ_M shall be taken as follows:

- resistance of bolted connections
  - bolts in shear or bearing $\gamma_{Mbs} = 1{,}45$
  - bolts in tension $\gamma_{Mbt} = 1{,}45$
- resistance of welded connections $\gamma_{Mw} = 1{,}50$

7.4.6.3 Slip joint connections

(ncpt) **CZ.1** Length tolerances for poles with slip joint connections shall be determined in the Project Specification to the level of lower cross-arms and to the level of a tower tip.

7.9 Corrosion protection and finishes

7.9.1 General

(ncpt) **CZ.1 Methods of corrosion protection**
The supports shall be protected against corrosion. Protection methods shall be determined in the Project Specification.

In extraordinary cases (in case of temporary structures), requirements regarding protection against corrosion may be reduced provided that it is specified in the Project Specification and the structure in question shall satisfy design requirements within the entire period of the design working life.

(ncpt) **CZ.2 Corrosion protection by painting**
If protection method by painting is required in the Project Specification, the Project Specification shall determine furthermore:

- the preparation for in-plant primer (preparation grade according to ISO 8501–1),
- required coating material and thickness for in-plant primer
- required coating system on site (coating materials, number and thickness of individual layers, colours, etc.).

The required coating system shall meet requirements of national regulations for health and environment protection.

7.9.4 Paint over galvanising

(ncpt) **CZ.1** When a paint coating is to be applied to zinc-coated surfaces, the Project Specification shall also determine, whether this paint coating shall be applied in-plant or on site. Furthermore, the Project Specification shall determine:

- the preparation of zinc-coated surface before painting,

Clause National regulation

– required coating system (coating material, number and thickness of individual layers, colours, etc.).

Required coating system shall have an excellent adherence to new galvanized steel and shall meet requirements of national regulations on health and environment protection.

7.9.5 Decorative finishes

(ncpt) **CZ.1** Requirements for daytime aircraft warning systems shall be determined in the Project Specification. The Project Specification shall also determine:

– supports, where a daytime aircraft warning system shall be applied,
– surfaces of the structure for individual colours,
– required coating system (paints, number and thickness of individual layers, colours in accordance with International Civil Aviation Organization (ICAO) Regulations of etc.).

Required coating system shall have an excellent adherence to new galvanized steel or be compatible with paint, which the system is applied over, and shall meet requirements of national regulations on health and environment protection.

7.10 Maintenance facilities

7.10.1 Climbing

(ncpt) **CZ.1** Steel lattice towers shall be structurally designed so that they shall allow safe access by authorised personnel as it is specified in ČSN 34 3101 and in Regulation of the Czech Office for Work Safety and the Czech Mining Office Board N° 324/1990 Coll. on work safety and safety of technical equipment being used in construction works.

This requirement is satisfied by a structure, where the distance of nodes at a leg member does not exceed 450 mm, or by a structure equipped with rung ladders or step-bolt ladders according to ČSN 74 3282. Ladders or other climbing facilities need not to be equipped with guarding (safety) cages and rest platforms, if requirements of ČSN 34 3101 and Regulation N° 324/1990 Coll. are satisfied.

The Project Specification may determine further requirements.

Where, in case of double or multi-circuit lines with circuits on both sides of a tower body, step bolts or step clips are mounted on main leg members, they shall be mounted on both diagonally opposite leg members.

Requirements for climbing facilities of poles shall be specified in the Project Specification.

The lowest step bolt, step clip or ladder rung may not be lower than 2,5 m above the top face of the foundation, or above the ground level respectively.

7.10.2 Maintainability

(ncpt) **CZ.1** Any possible requirements for special attachments/holes for installation of maintenance equipment shall be specified in the Project Specification.

7.10.3 Safety requirements

(ncpt) **CZ.1 Safety warning signs**
Every support shall be provided with at least one safety warning sign according to ISO 3864 with a symbol of a lightning stroke (symbol B.3.6 according to ISO) and legend in Czech language "*Vysoké napětí – Životu nebezpečno dotýkat se elektrických zařízení nebo drátů i na tem spadlých*" (High Voltage – Shock Death Hazard to Touch Electric Equipment or Wires even Fallen on Ground). Warning signs are placed at a height of 1,5 to 2,5 m above ground usually on those sides of a tower body, which are parallel to the longitudinal cross-arm axes. Warning signs shall be visible from every public way. The structure of supports shall allow to fix warning signs in a manner specified in the Project Specification.

The Project Specification may state more detailed conditions or other requirements (for example information on the line operator, telephone numbers for emergency contact and other command and/or prohibition marking).

Clause National regulation

(ncpt) **CZ.2 Prevention of unauthorised climbing**

Requirements for provision of towers preventing climbing of unauthorised persons shall be specified in the Project Specification.

(ncpt) **CZ.3 Support numbering**

Every support shall be provided with a serial number according to requirements specified in the Project Specification.

Such numbering is usually provided in one of following ways:

- by contrast colour on two diagonally opposite leg members on legs parallel to the longitudinal cross–arm axis (on the left leg member, when looking at the tower),
- by numbering plates (on one or both tower faces parallel to the longitudinal cross-arm axis),
- by numbers on warning signs bellow the safety legend.

Support numbering is applied at a height ranging from 1,5 to 2,5 m above ground. The Project Specification may specify other requirements (e.g. numbering at tips of supports for air inspection) and details (size and colour of numbers, number, placement and fixing method of numbering plates, etc.).

(ncpt) **CZ.4 Circuit identification markings**

In case of double and multi-circuit lines, individual circuits on every support shall be unambiguously differentiated by circuit identification markings. Generally, circuits are identified by colours, either as paints applied directly to structures or colour plates. Identification is performed under each cross-arm and at a height of approximately 2 m above ground. For lattice towers, these identification marks are painted on leg members in a length of approximately 0,5 m at least on legs parallel to the longitudinal cross-arm axis; or in case of identification plates, such plates are placed on leg members or next to them. If there are conductors of separate circuits on common cross-arms, the identification markings are not applied on the tower body under cross-arms, but directly on cross-arms in attachment points of insulator sets.

Preferred colours are white and red, or blue and yellow. Colours shall be sufficiently contrast to the colour of the structure surface.

In case of new lines, new branches from existing lines and interconnection of existing lines by a new line, the principle that each individual circuit has to be identified by the same colour in the entire length between its end points shall be maintained (see Figure 7.10/CZ.1 for identification of circuits in a branching point).

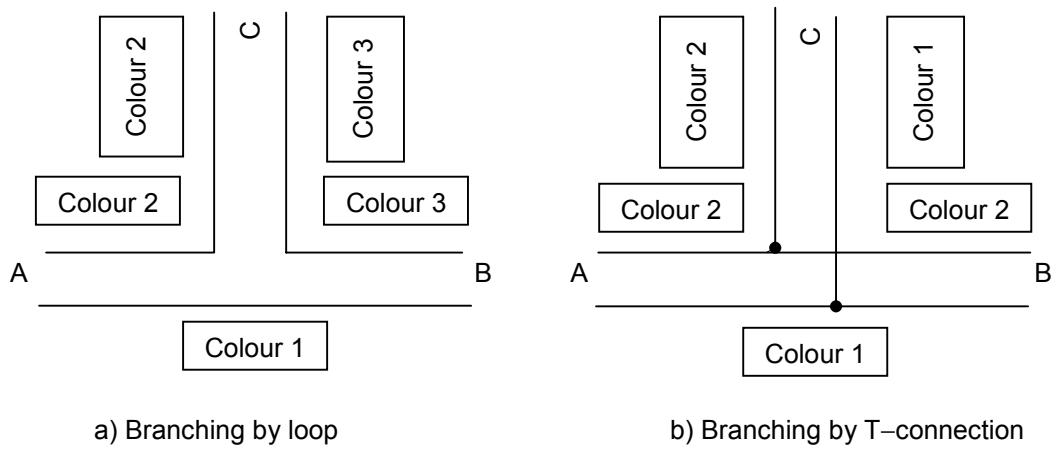

a) Branching by loop b) Branching by T–connection

Figure 7.10/CZ.1 – Identification of branching circuits

The Project Specification may state more detailed requirements for circuit identification markings.

Clause National regulation

The Project Specification may specify further requirements for identification marking of circuits or individual phase conductors (e.g. identification markings of individual phase conductors on selected supports, marking of circuits by identification numbers, etc.).

(ncpt) **CZ.5 Attachment of earthing conductors**
Every support shall allow detachable joint of earthing conductors above foundations. The manner and details may be specified in the Project Specification.

NOTE It is recommended that the design of lattice towers shall allow to connect earthing conductors to each leg member.

8 Foundations

8.2 General requirements

(ncpt) **CZ.1** When designing the foundations of supports, it is needed to take into account the minimum admissible distance of foundations from cables, pipelines and other underground systems and their protective zones.

NOTE Location of foundations in relation to underground systems shall respect laws and regulations valid for these underground systems.

8.3 Soil investigation

(ncpt) **CZ.1** Prior to determination of the type of foundation, its form and dimensions, the soil structure below the surface down to a depth of at least 1,5 times the foundation depth must be known. In case of pile foundations, an exploratory boring is to be carried out to a depth greater than the assumed pile tip depth.

If no detail information from the geotechnical soil investigation is available, the soil parameters specified in Tables M/CZ.3, M/CZ.4, M/CZ.5 and M/CZ.6 in Annex M may be used for the initial design.

8.4 Loads acting on foundations

(ncpt) **CZ.1** Unless otherwise specified in the Project Specification, the foundation of the support is designed for loads, transferred from the support to the subsoil, corresponding to forces resulting from relevant load cases, and they are determined individually for every support in question according to actual conditions of its use.

The Project Specification may determine that support foundations shall be designed also for loads, corresponding to forces, for which the type support structures are designed.

8.5 Geotechnical design

8.5.1 General

(ncpt) **CZ.1** For the geotechnical design of foundations, such calculation methods have to be used, which are confirmed by experience (verified by established practices). By these methods it shall be proved that:

– design loads on the foundation are lower or equal to the design foundation resistance;
– foundation provides the stability of tower.

8.5.2 Geotechnical design by calculation

8.5.2.1 General design formula

(ncpt) **CZ.1 Foundation resistance**
Values of the partial coefficient for the resistance γ_M:

$\gamma_M = 1{,}0$ for design values of properties of foundation soil (according to Tables M/CZ.3, M/CZ.4, M/CZ.5 and M/CZ.6 in Annex M);

$\gamma_M \geq 1{,}0$ according to ENV 1997–1 for characteristic values of foundation soil properties.

Clause National regulation

(ncpt) **CZ.2 Stability of the support**
The foundation provides the support stability, if it is proved by calculation that the ratio of stabilizing moments to overturning moments is at least 1,5.

8.7 Structural design

(ncpt) **CZ.1** Structural design parameters shall conform to ENV 1992-3.

The method of interconnection between the concrete foundation and the support body shall be as specified in the Project Specification.

Unless otherwise specified in the Project Specification, the upper edge of above-ground parts of the concrete foundation shall be at least 40 cm above ground.

The upper part of the concrete foundation (foundation head) shall be reinforced to prevent possible crack formation.

For the stepped foundations, a height of a plain-concrete step shall not be lower than 1,4 times the step projection. This provision need not to be satisfied provided a sufficient resistance of the designed step is proved by calculation.

8.8 Construction and installation

(ncpt) **CZ.1** The foundations made of plain concrete are to be constructed in such a way that no dilatation joint comes into being within a height of individual steps. Dilatation joints resulting from construction methods between individual foundation steps shall be mutually bound by interconnecting reinforcement.

9 Conductors and overhead earthwires (ground wires) with or without telecommunication circuits

9.1 Introduction

(ncpt) **CZ.1 Insulated conductors**
When insulated conductors are to be used, requirements posed on them shall be stated in the Project Specification with reference to manufacturer's data.

(ncpt) **CZ.2 All dielectric self-supporting optical cables (ADSS)**
When all dielectric self-supporting optical cables (ADSS) are to be used, requirements for these cables shall be stated in the Project Specification with reference to manufacturer's data.

9.2 Aluminium based conductors

9.2.1 Characteristics and dimensions

(ncpt) **CZ.1 Conductor specification**
The Project Specification shall specify the type of conductors in one of following ways:

a) according to EN 50182:

Dimensions and characteristics of conductors shall be determined according to EN 50182 and corresponding standards for wires, of which the conductor is composed (EN 50183, EN 50189, EN 60899, EN 61232). In case of details, which are not specified in these standards, it is possible to proceed from other verified sources.

b) In extraordinary cases according to other standards for the aluminium based stranded conductors.

Dimensions and characteristics of conductors shall be determined according to relevant standards for cables and corresponding standards for wires, of which the conductor is composed. In case of details, which are not specified in these standards, it is possible to proceed from other verified sources. The Project Specification shall state the relation between characteristics of a conductor being determined according to the standard,

Clause National regulation

under which the conductor is specified, and characteristics being determined according to EN 50182.

NOTE If the conductors are composed of wires, which are not standardized (e.g. wires of aluminium alloys for high temperatures), it is possible to gather required data from other verified sources.

The design and calculation of the conductor performance shall take into account the effect of permanent elongation on the conductor sag. Guidance on the calculation methods is included e.g. in IEC 61597.

To determine the minimum diameter of a phase conductor, noise levels specified in 5.5.1.3/CZ.1 need to be also taken into account.

However, the rated cross-section of a stranded conductor may not be less than 50 mm^2.

9.2.2 Electrical requirements

(ncpt) **CZ.1 Determination of DC resistance of the conductor**

a) for conductors according to 9.2.1/CZ.1, item a)

The DC conductor resistance shall be determined according to EN 50182 and corresponding standards for wires, of which the conductor is composed (EN 50183, EN 50189, EN 60899, EN 61232). For non-standard wires it is possible to proceed from other verified sources.

b) for conductors according to 9.2.1/CZ.1, item b)

The DC conductor resistance shall be determined according to respective standards for stranded conductors and relating standards for wires. For non-standard wires it is possible to proceed from other verified sources.

(ncpt) **CZ.2 Calculation of AC resistance of the conductor at power frequency**

The conductor resistance for power frequency current is calculated using verified methods.

9.2.3 Conductor service temperatures and grease characteristics

(ncpt) **CZ.1 Maximum permissible temperatures of conductors**

The design maximum conductor temperature at normal line loading according to 5.4.2.2.1/CZ.1 may not be higher than + 80°C.

The Project Specification may specify the maximum short duration temperature of aluminium based conductors at special line loading above the normal level (see 5.2.1/CZ.1 and 5.4.2.2.1/CZ.1). This temperature, however, may not be higher than + 150°C, where it is necessary to take into account conductor manufacturer's data concerning the deterioration of conductor mechanical properties when operated at higher temperatures.

The maximum temperature of aluminium based conductors due to a specified power system fault (due to short-circuit currents) according to 5.2.2 is equal to + 200°C. The Project Specification may specify a lower temperature and/or may specify other requirements. When determining the maximum conductor temperature due to a specified power system fault, conductor manufacturer's data shall be taken to account. When calculating conductor temperature due to a specified power system fault (due to short-circuit currents), the initial temperature of conductors is taken as + 40°C, unless the Project Specification specifies a higher temperature.

(ncpt) **CZ.2 Maximum permissible temperatures of special conductors**

If special materials and suitable structure of conductors and fittings are applied, the Project Specification may specify higher temperatures than those specified in 9.2.3/CZ.1 taking into account data of conductor and fitting manufacturers.

(ncpt) **CZ.3 Properties of grease**

When the application of grease is required for corrosion protection (see 9.2.5/CZ.1), its properties shall meet requirements of EN 50326 for the full range of service conductor temperatures ranging from – 30°C to the design maximum temperature at normal line loading, specified in 5.4.2.2.1/CZ.1, or up to the maximum short duration conductor

Clause National regulation

temperature at special loading above the normal level, specified in the Project Specification. The Project Specification shall specify the required temperatures Θ1 and Θ2 according to EN 50326, and additionally it may specify the temperatures Θ3 and Θ4 and other requirements according to EN 50326.

9.2.4 Mechanical requirements

(ncpt) **CZ.1 Limit states**

a) ultimate limit states

The conductor tension in whichever point of the span at design loads, corresponding to the load cases 1a, 1b, and 3 according to Table 4.2.11/CZ.1, shall not exceed 65 % of the conductor rated tensile strength. The Project Specification may specify a lower value.

b) serviceability limit states

The conductor tension in whichever point of the span at design loads, corresponding to the load cases 1a, 1b, and 3 according to Table 4.2.11/CZ.2, shall not exceed 55 % of the conductor rated tensile strength. The Project Specification may specify a lower value.

(ncpt) **CZ.2 Protection against damage due to wind induced vibrations**

The Project Specification shall specify, whether and in what manner single conductors and/or bundle conductors are to be protected against wind induced vibrations.

For single conductors, with regard to their tension, weight and diameter, length of the span and terrain category, it is recommended to meet following requirements (see Figure 9.2.4/CZ.1) :

1) if conductor parameters for the respective terrain category fall in the zone 1 (basic safe zone) in Figure 9.2.4/CZ.1, there is no need to protect conductor by vibration dampers;
2) if conductor parameters for respective terrain category fall in the zone 2 (safe zone) in Figure 9.2.4/CZ.1, the protection of conductors can be performed by means of one or more vibration dampers of Stockbridge type (or other appropriate vibration dampers) set up at the span ends;
3) if conductor parameters for respective terrain category fall in the zone 3 (special application zone) in Figure 9.2.4/CZ.1, the designer shall verify the availability of adequate conductor protection against damages due to vibrations.

NOTE The corresponding equation of the right boundary of the safe zone 2 is specified below each diagram of Figure 9.2.4/CZ.1. The equation for the upper limit is $L \cdot d/g_c = 1{,}5$ for all terrain categories.

The above-mentioned recommendations apply to single conductors AL1–AL7 (former designation AAC or AAAC), AL1/AL2–AL7 (former designation ACAR), AL1/Styz and AL1/yzSA (former designation ACSR and ACSR/AS) and do not apply to conductors AL2–AL7/Styz and AL2–AL7/yzSA (former designation AACSR and AACSR/AS).

The Project Specification may specify other criteria for estimation of conductor damage risk due to vibrations, e.g. with respect to frequent occurrence of wind in the given region, practical experience, etc.

Clause National regulation

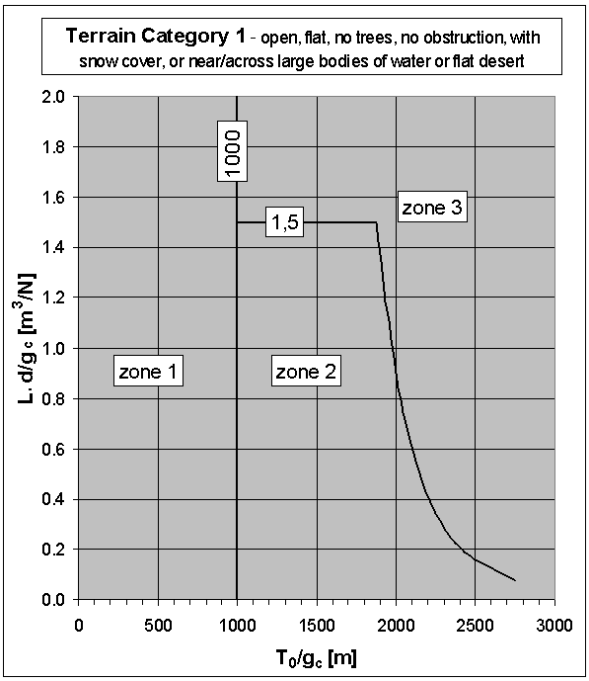

$L \cdot d/g_c = (1{,}3 \times 10^{27})/(T_0/g_c)^{8{,}2}$

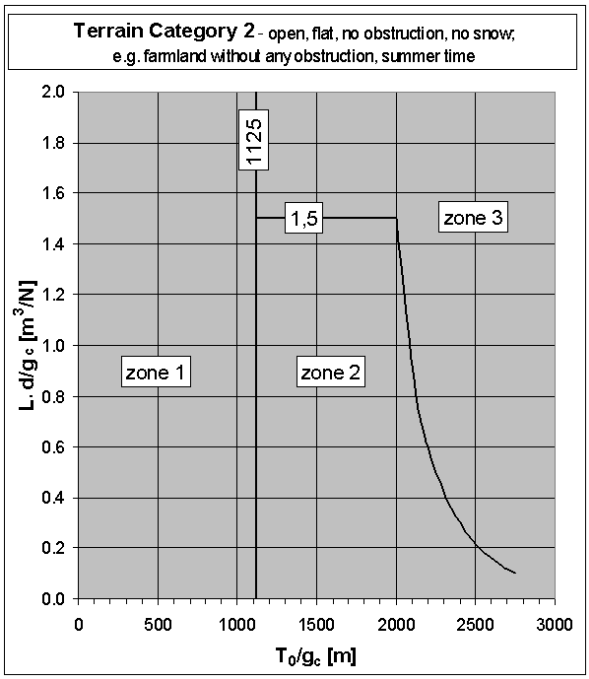

$L \cdot d/g_c = (5{,}4 \times 10^{27})/(T_0/g_c)^{8{,}3}$

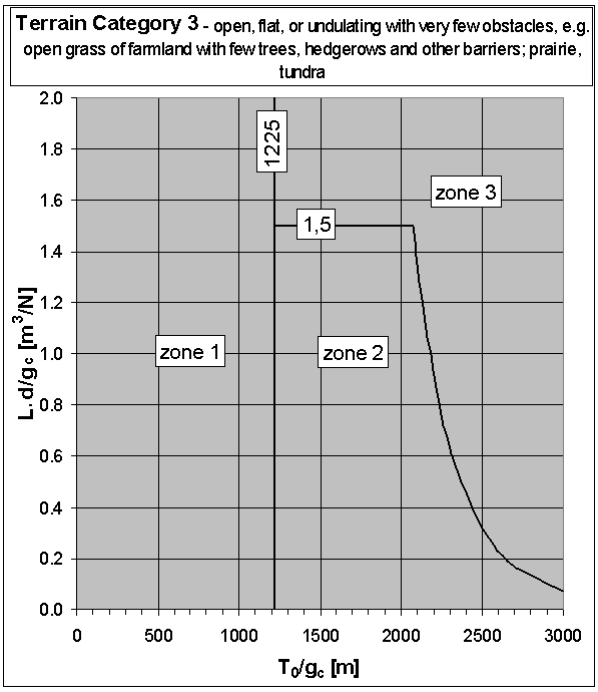

$L \cdot d/g_c = (1{,}3 \times 10^{28})/(T_0/g_c)^{8{,}4}$

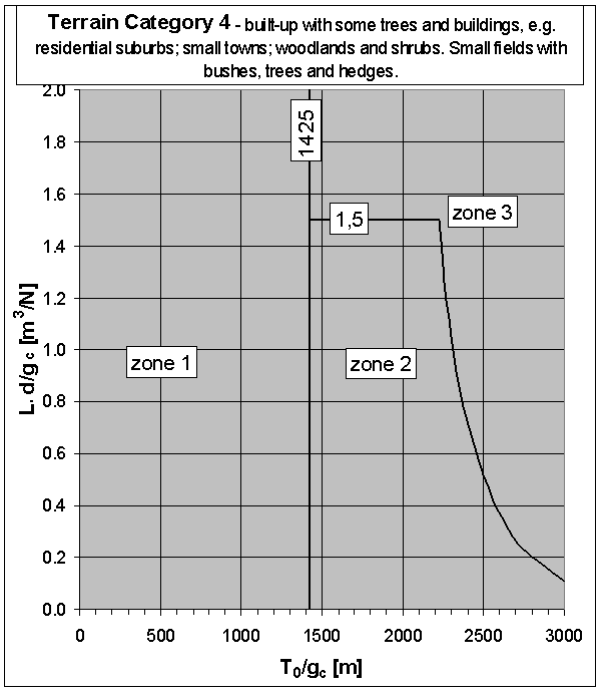

$L \cdot d/g_c = (1{,}1 \times 10^{29})/(T_0/g_c)^{8{,}6}$

where T_0 [N] the horizontal component of conductor tension at the average temperature of the coldest month in year. For these purposes, it is possible to proceed from conductor tension after 1 year from erection works. Unless otherwise specified in the Project Specification, the mean temperature in the coldest month in year can be taken as – 5°C.

g_c [N/m] conductor weight per unit length

L [m] span between towers

d [m] conductor diameter

Figure 9.2.4/CZ.1 – Recommended safe tension for single conductor

Clause National regulation

9.2.5 Corrosion protection

(ncpt) **CZ.1 Conductor greasing**
The Project Specification shall specify, whether or not the conductor shall be protected against corrosion by greasing and the type and required amount of grease.

9.2.6 Test requirements

(ncpt) **CZ.1 Special tests**
The Project Specification may require to perform special tests.

(ncpt) **CZ.2 Tests of stranded conductors according to other standards**
If the conductor has been manufactured according to other standard than according to EN 50182, tests may be performed according to that relevant standard.

9.3 Steel based conductors

9.3.1 Characteristics and dimensions

(ncpt) **CZ.1 Specification of conductor**
The Project Specification shall specify the conductor type in one of following ways:

a) according to EN 50182 (for conductors of aluminium clad steel wires).

Dimensions and characteristics of conductors shall be determined according to EN 50182 and corresponding standard for wires, of which the conductor is composed (EN 61232). In case of details, which are not specified in these standards, it is possible to proceed from other verified sources;

b) according to other standards.

The Project Specification may refer to corresponding standards for wires (e.g. EN 50189) and to applicable provisions of EN 50182 (e.g. construction methods). For non-standard wires and for details, which are not specified in standards, it is possible to proceed from other verified sources. The Project Specification shall state the relation between characteristics of a conductor being determined according to standards, under which the conductor is specified, and parameters being determined according to EN 50182.

To determine the minimum diameter of a phase conductor, noise levels according to 5.5.1.3/CZ.1 need to be also taken into account.

The rated cross-section of a conductor may not be less than 50 mm^2.

9.3.2 Electrical requirements

(ncpt) **CZ.1 Determination of DC resistance of the conductor**

a) for conductors according to 9.3.1/CZ.1 item a)

The DC conductor resistance shall be determined according to EN 50182 and corresponding standard for wires, of which the conductor is composed (EN 61232). For non-standard wires it is possible to proceed from other verified sources.

b) for conductors according to 9.3.1/CZ.1 item b)

The DC conductor resistance shall be determined according to respective standards for stranded conductors and relating standards for wires. For non-standard wires it is possible to proceed from other verified sources.

(ncpt) **CZ.2 Calculation of AC resistance of the conductor at power frequency**
The conductor resistance for power frequency current is calculated using verified methods.

9.3.3 Conductor service temperatures and grease characteristics

(ncpt) **CZ.1 Maximum permissible temperatures of conductors**
The design maximum conductor temperature at normal line loading according to 5.4.2.2.1/CZ.1 may not be higher than + 80°C.

Clause National regulation

The Project Specification may specify the maximum short duration temperature of steel based conductors at special line loading above the normal level (see 5.2.1/CZ.1 and 5.4.2.2.1/CZ.1). However, this temperature may not be higher than + 180°C, where it is necessary to take into account conductor manufacturer's data concerning the deterioration of conductor mechanical properties when operated at higher temperatures.

The maximum temperature of steel based conductors due to a specified power system fault (due to short-circuit currents) according to 5.2.2 is equal to + 300°C. The Project Specification may specify a lower temperature and/or may specify other requirements. When determining the maximum conductor temperature due to a specified power system fault, conductor manufacturer's data shall be taken into account. When calculating conductor temperature due to a specified power system fault (due to short-circuit currents), the initial temperature of conductors is taken as + 40°C, unless the Project Specification specifies a higher temperature.

(ncpt) **CZ.2 Maximum permissible temperatures of special conductors**

If special materials and appropriate structures of conductors and fittings are applied, the Project Specification may specify higher temperatures than those specified in 9.3.3/CZ.1 taking to account data of conductor and fitting manufacturers.

(ncpt) **CZ.3 Properties of grease**

If the application of grease is required for corrosion protection (see 9.3.5/CZ.1), its properties shall meet requirements of EN 50326 for the full range of service conductor temperatures ranging from – 30°C to the design maximum temperature at normal line loading, specified in 5.4.2.2.1/CZ.1, or up to the maximum short duration conductor temperature at special line loading above the normal level, specified in the Project Specification. The Project Specification shall specify the required temperatures Θ1 and Θ2 according to EN 50326, and additionally it may specify the temperatures Θ3 and Θ4 and other requirements according to EN 50326.

9.3.4 Mechanical requirements

(ncpt) **CZ.1 Limit states**

a) ultimate limit states

The conductor tension in whichever point of the span at design loads, corresponding to load cases 1a, 1b and 3 according to Table 4.2.11/CZ.1, shall not exceed 68 % of conductor rated tensile strength. The Project Specification may specify a lower value.

b) serviceability limit states

The conductor tension in whichever point of the span at loads, corresponding to load cases 1a, 1b and 3 according to Table 4.2.11/CZ.2, shall not exceed 58 % of conductor rated tensile strength. The Project Specification may specify a lower value.

(ncpt) **CZ.2 Protection against damage due to wind induced vibrations**

The Project Specification shall specify, whether and in what manner conductors are to be protected against wind induced vibrations.

It is recommended that the horizontal tension T_0 of an unprotected single conductor (without vibration dampers, suspension clamps without armour rods) at the mean year temperature should not exceed 11 % of conductor rated tensile strength in case of using fixed clamps and 13 % of conductor rated tensile strength in case of using swivelling clamps. Unless otherwise specified in the Project Specification, the mean year temperature is taken as + 10°C.

For higher values of conductor tensions at the mean year temperature, it is recommended to protect conductors by appropriately designed vibration dampers.

The Project Specification may specify a different value of a horizontal component of conductor tension T_0 or other criteria for estimation of conductor damage risk due to vibrations, e.g. with respect to frequent occurrence of wind in the given region, etc.

Clause National regulation

9.3.5 Corrosion protection

(ncpt) **CZ.1 Conductor greasing**
The Project Specification shall specify, whether or not the conductor shall be protected against corrosion by greasing and the type and required amount of grease.

9.3.6 Test requirements

(ncpt) **CZ.1 Special tests**
The Project Specification may require to perform special tests.

(ncpt) **CZ.2 Tests of stranded conductors according to other standards**
If the conductor has been manufactured according to other standard than according to EN 50182, tests may be performed according to that relevant standard.

9.4 Copper based conductors

(ncpt) **CZ.1 Requirements**
Requirements for the conductors shall be determined in the Project Specification.

9.5 Conductors (OPCON´s) and ground wires (OPWG´s) containing optical fibre telecommunication circuits

9.5.1 Characteristics and dimensions

(ncpt) **CZ.1 Conductor specification**
The Project Specification shall specify the type of a conductor according to EN 187200 or according to IEC 60794-4-1.

It is recommended that the diameter of the outer layer round wires of aluminium or aluminium alloys should not be less than 2,33 mm.

The design and calculation of the conductor performance shall take into account the effect of permanent elongation on the conductor sag. Guidance on the calculation methods is included in e.g. IEC 61597.

To determine the minimum diameter of a phase conductor (OPCON), noise levels specified in 5.5.1.3/CZ.1 need to be also taken into account.

However, the rated cross-section of a stranded conductor may not be less than 50 mm^2.

9.5.2 Electrical requirements

(ncpt) **CZ.1 Determination of DC resistance of the conductor**
The DC conductor resistance shall be determined according to EN 187200 or according to IEC 60794-4-1 and corresponding standards for wires, of which the conductor is composed. For non-standard wires it is possible to proceed from other verified sources.

(ncpt) **CZ.2 Calculation of AC resistance of the conductor at power frequency**
The conductor resistance for power frequency current is calculated using verified methods.

9.5.3 Conductor service temperature

(ncpt) **CZ.1 Maximum permissible temperatures of conductors**
The design maximum temperature of phase conductors (OPCON) at normal line loading according to 5.4.2.2.1/CZ.1 is taken as + 80°C, unless the conductor manufacturer specifies a lower temperature. The deterioration of optical characteristics of phase conductors may not occur up to this temperature.

The Project Specification may specify the maximum short duration temperature of phase conductors (OPCON) at special line loading line above the normal level (see 5.2.1/CZ.1 and 5.4.2.2.1/CZ.1). When determining the maximum short duration temperature of phase conductors (OPCON) at special line loading above the normal level, it is needed to take into account conductor manufacturer's data. The deterioration neither of mechanical nor optical

Clause National regulation

characteristics of phase conductors may occur up to the maximum short duration temperature above the normal level, unless otherwise specified in the Project Specification.

The maximum temperature of phase conductors (OPCON) and ground wires (OPGW) due to a specified power system fault (due to short-circuit currents) according to 5.2.2 is + 200°C. The Project Specification may specify a lower temperature, and/or it may specify other requirements. When determining the maximum conductor temperature due to a specified power system fault, it is necessary to take into account the conductor manufacturer's data. At this temperature, the irreversible deterioration neither of mechanical nor optical characteristics of conductors may occur. For the calculation of the conductor temperature due to a specified power system fault (short-circuit), the initial conductor temperature is taken as + 40°C, unless the Project Specification specifies a higher temperature.

(ncpt) **CZ.2 Maximum permissible temperatures of special conductors**

If special materials and appropriate structures of conductors and fittings are applied, the Project Specification may specify higher temperatures than those specified in 9.3.3/CZ.1 taking to account data of conductor and fitting manufacturers.

(ncpt) **CZ.3 Properties of grease**

If the application of grease is required for corrosion protection (see 9.5.5/CZ.1), their properties shall meet requirements of EN 50326 for the full range of conductor service temperatures from - 30°C up to the design maximum temperature at normal line loading, specified in 5.4.2.2.1/CZ.1, or up to the maximum short duration temperature of conductors at special line loading above the normal level, specified in the Project Specification. The Project Specification shall specify the required temperatures Θ1 and Θ2 according to EN 50326 and additionally it may specify the temperatures Θ3 and Θ4 and other requirements according to EN 50326.

9.5.4 Mechanical requirements

(ncpt) **CZ.1 Limit states**

a) ultimate limit states

The conductor tension in whichever point of the span at design loads, corresponding to load cases 1a, 1b, and 3 according to Table 4.2.11/CZ.1, shall not exceed

- 65 % of conductor rated tensile strength in case of aluminium based conductors;
- 68 % of conductor rated tensile strength in case of steel based conductors.

However, it is needed to respect the conductor manufacturer's data. The Project Specification may specify a lower value. At this conductor tension, optical fibres may not be loaded by tensions and/or the deterioration of conductor optical properties may not occur, unless otherwise specified in the Project Specification.

b) serviceability limit states

The conductor (OPCON and OPGW) tension in whichever point of the span at design loads, corresponding to load cases 1a, 1b, and 3 according to Table 4.2.11/CZ.2, shall not exceed

- 55 % of conductor rated tensile strength in case of aluminium based conductors;
- 58 % of conductor rated tensile strength in case of steel based conductors.

However, it is necessary to respect the conductor manufacturer's data. The Project Specification may specify a lower value. At this tension, optical fibres may not be loaded by tensions and/or the deterioration of conductor optical properties may not occur, unless otherwise specified in the Project Specification.

(ncpt) **CZ.2 Protection against damage due to wind induced vibrations**

The Project Specification shall specify, whether and in what manner conductors are to be protected against wind induced vibrations. It is recommended to protect conductors OPCON and OPGW always against vibrations by appropriate vibration dampers or by another appropriate method. Here, it is needed to take into account the conductor manufacturer's

Clause National regulation

data. It is recommended, that the limit values, resulting from 9.2.4/CZ.2 for the safe zone 2, or limit tension values according to 9.3.4/CZ.2, if appropriate, should not be exceeded.

The Project Specification may specify maximum tension value or another method of restriction of conductor tension under specified conditions, e.g. with respect to the frequency of winds in the given region, etc.

9.5.5 Corrosion protection

(ncpt) **CZ.1 Conductor greasing**
The Project Specification shall specify, whether or not the conductor shall be protected against corrosion by greasing and the type and amount of grease.

9.6 General requirements

(ncpt) **CZ.1 Partial safety factor for conductors**
The maximum permissible conductor tensile forces are specified in 9.2.4/CZ.1, 9.3.4/CZ.1, and 9.5.4/CZ.1.

(ncpt) **CZ.2 Conductor splicing**
Requirements for the maximum permissible number of joints of a conductor in one span are specified in 5.4.5.1/CZ.7. The Project Specification may determine other requirements for the number of joints, their minimum spacing, minimum distance between a joint and a support, etc.

9.7 Test reports and certificates

(ncpt) **CZ.1 Scope of tests**
The required scope of tests has to be agreed between the conductor manufacturer and the client.

10 Insulators

10.1 General

(ncpt) **CZ.1 Application of multiple insulator sets**
Double and multiple insulator strings are applied for the following reasons :

- due to the increased safety requirements according to 5.4.5/CZ.8.1. Additional requirements may be given in the Project Specification;
- when single insulator sets do not satisfy requirements given in the following subclauses of this clause, especially mechanical requirements according to 10.7/CZ.1;
- due to the increased security requirements in order to prevent failure.

Only double or multiple insulator sets shall be used as tension insulator sets of circuits with a rated voltage of 400 kV. Here, each insulator string of double and triple tension insulator sets shall be attached to the support structure separately. An exception to this rule may be tolerated only in case older types of supports are to be used, which have not been tailored to attach individual strings of insulator sets.

Application of double tension insulator sets is recommended for lines with rated voltages 110 kV and 220 kV, especially with regard to vandalism, if ceramic long rod insulator units are to be used. Single tension insulator sets may be used if only it is permitted by the Project Specification or in isolated cases (e.g. in spans with reduced conductor tensions) with the customer′s approval and if their application is not in conflict with other requirements of this standard.

The application of double insulator sets is recommended also at angle suspension supports.

Double suspension insulator sets with parallel strings are to be designed so that the plane passing through axes of both insulator strings should be parallel to the line route.

Clause National regulation

The application of single insulator sets composed of ceramic long rod insulator units is not recommended for circuits with a rated voltage of 400 kV. Single suspension sets can be used for circuits with a rated voltage of 400 kV if only it is permitted by the Project Specification and their application is not in conflict with other requirements of this standard.

Each insulator string of double suspension insulator sets for circuits with a rated voltage of 400 kV shall be attached to the support structure separately. An exception to this rule may be tolerated only in case older types of supports are to be used, which have not been tailored to attach individual strings of insulator sets.

10.2 Standard electrical requirements

(ncpt) **CZ.1 Withstand voltages of insulator sets**

The required withstand voltages of insulator sets for circuits with rated voltages from 110 kV to 400 kV are specified in Table 5.4.3.2/CZ1.

For circuits with rated voltages ranging from 1 kV to 45 kV, which are on common supports with circuits with a rated voltage of 110 kV, the withstand voltage of insulator sets is selected according to ČSN 33 3201, Annex T “Special national conditions and national provisions for the Czech Republic“.

(ncpt) **CZ.2 Application of protective fittings**

The insulator strings of circuits with rated voltages from 110 kV to 400 kV shall be equipped with protective fittings to ensure the required short-circuit resistance (see 10.5/CZ.1) and required levels of radio noise (see 10.3/CZ.1).

Each A–class insulator (see EN 60383-1) in an insulator set shall be equipped with protective fittings, unless it is proved by type tests that their application is not necessary.

(ncpt) **CZ.3 Direction of insulator set protective fittings**

If protective fittings with arcing horns are used, arcing horn direction shall be following :

a) Single suspension sets :
   - *for insulator sets on cross-arms* : in direction perpendicular to the conductor and from a tower body;
   - *for insulator sets inside the tower window or gantry* : along the conductor and in direction from a power supply, from which a greater part of short-circuit current (the sum of zero sequence currents) flows in the support location in question.

b) Double suspension sets orientated along the line :
   - along the conductor in both directions from an insulator set axis.

c) Double suspension sets orientated in direction perpendicular to the line :
   - along the conductor, at individual strings in opposite directions.

d) Suspension V–insulator sets :
   - in direction perpendicular to the conductor and inwards the insulator set.

e) Tension sets :
   - upwards.

10.3 RIV requirements and corona extinction voltage

(ncpt) **CZ.1 Requirements for radio noise**

The maximum permissible levels of radio interference voltages of insulator sets, measured according to EN 60437 and CISPR 18-2 across an impedance of 300 Ω on a frequency of 0,5 MHz, are specified in the following Table 10.3/CZ.1.

Clause National regulation

Table 10.3/CZ.1 – Maximum permissible levels of radio interference voltages of insulator sets

Highest system voltage (kV)	123	245	420
Max. permissible level of radio noise – industrial areas (dB)	56	73	73
Max. permissible level of radio noise – residential areas (dB)	56	56	56

10.4 Pollution performance requirements

(ncpt) **CZ.1 Selection of insulators for polluted environment**

Insulators to be used in the polluted environment shall be selected in accordance with ČSN 33 0405.

The pollution levels of areas, where the line will be routed, shall be determined in the Project Specification.

10.5 Power arc requirements

(ncpt) **CZ.1 Short-circuit resistance**

Insulator sets for lines with rated voltages from 110 kV to 400 kV shall be resistant to effects of arcing short-circuits. This requirement is verified by a type power arc test on one completely furnished insulator set. Tests shall be carried out in accordance with IEC 61467, if not otherwise specified below.

Three successive power arc tests shall be carried out on given insulator set, the first two of them with duration of short-circuit current of 0,2 second and the third test with duration of short-circuit current of 0,5 second.

Unless otherwise specified in the Project Specification,

- tests are performed by the one-side fed short-circuit (test circuit B) according to IEC 61467;
- the value of short-circuit current shall be selected from following Table 10.5/CZ.1.

Table 10.5/CZ.1 – Values of short-circuit current for power arc tests

Highest system voltage (kV)	Short-circuit current (kA)
123	25
245	25
420	35

On completion of the power arc tests,

- insulators shall meet evaluative criteria given in IEC 61467;
- residual mechanical strengths of insulator set fittings shall be greater than 80 % of their specified minimum failing loads (according to EN 61284).

Clause National regulation

10.7 Mechanical requirements

(ncpt) **CZ.1 Partial factors for a material property for insulators**

CZ.1.1 Ultimate limit states

When verifying the design resistance of insulators at the ultimate limit states the partial factor for a material property γ_{M1} = 1,8 shall be taken for all types of insulators, unless a higher value is required in the Project Specification. Here, the design loads acting on insulators are considered, resulting from conductors and insulator sets themselves in the load cases, specified in 4.2.10.2/CZ.1 and 4.2.10.2/CZ.2 in conjunction with the partial factors for actions according to 4.2.11/CZ.1.

The requirement for the mechanical resistance of insulators in case of one-sided release of conductor tension (security load – load case 5a) does not apply to line post insulators, where requirements for the resistance of insulators to longitudinal loads shall be specified in the Project Specification.

CZ.1.2 Serviceability limit states

When verifying the design resistance of insulators at the serviceability limit states the partial factor for a material property γ_{M2} = 2,2 shall be taken for all types of insulators, unless a higher value is required in the Project Specification. Here, the design loads are considered, resulting from the load cases 1a, 1b and 2a, specified in Table 4.2.11/CZ.2.

NOTE The partial factors for materials γ_M, listed in 10.7/CZ.1.1, 10.7/CZ.1.2 and in 10.7/CZ.3 below, relate to:

- minimum mechanical (for ceramic and glass insulator units – class A) or electro-mechanical (for ceramic and glass insulator units – class B) failing load according to EN 60383-1;
- specified mechanical load of composite insulators according to IEC 61109.

(ncpt) **CZ.2 Minimum permissible load on insulator sets**

To prevent potential occurence of radio noise by spark discharges due to capacitive coupling, every sliding connection in all line insulator sets shall be subjected, under still air conditions, to tension or compression with a minimum value of 0,5 kN.

(ncpt) **CZ.3 Multiple insulator sets**

In case of failing of one string of an insulator set, composed of two or more insulator strings, it shall be verified that the effect of design actions does not exceed the design resistance of remaining insulators. Here, it is considered that maximum static forces, determined according to 4.2.7/CZ.7, act on insulators in the remaining strings. The partial factor for a material property for insulators in remaining strings is taken as γ_{M3} = 1,1, unless a higher value is required in the Project Specification.

Insulator sets composed of two or more parallel insulator strings shall be designed so that:

- total tension should be as far as possible equally distributed among individual insulator strings, both in the intact state and after rupture of one insulator string in an insulator set;
- the remaining insulator strings should not fail due to a dynamic stress resulting from the rupture of one string of an insulator set. Here, any expectable dynamic forces and bending moments shall be taken into account. For tension insulator sets this requirement shall be verified by a dynamic test according to 10.11.2/CZ.3.

10.11 Type test requirements

10.11.1 Standard type tests

(ncpt) **CZ.1 Type tests of composite insulators**

For composite insulators for the highest system voltage of 123 kV and higher ones, ageing test at the operating voltage and simulation of climatic conditions according to IEC 61109, Annex C, is required in addition to type tests required in IEC 61109.

(ncpt) **CZ.2 Type tests of insulator sets**

For insulator sets for the highest system voltage of 123 kV and higher ones, in addition to electric tests according to EN 60383-2, Section 2, following tests are required:

Clause National regulation

- radio interference tests according to EN 60437 (for requirements see 10.3/CZ.1);
- power arc tests according to IEC 61467 (for requirements see 10.5/CZ.1);
- dynamic tests of tension insulator sets according to 10.11.1/CZ.3.

(ncpt) **CZ.3 Dynamic tests of tension insulator sets**

The purpose of dynamic tests of tension insulator sets is to verify, that the remaining insulator strings will not fail due to dynamic forces and bending moments when interrupting of one string.

The example of a dynamic test arrangement is shown in Figure 10.11.1/CZ.1.

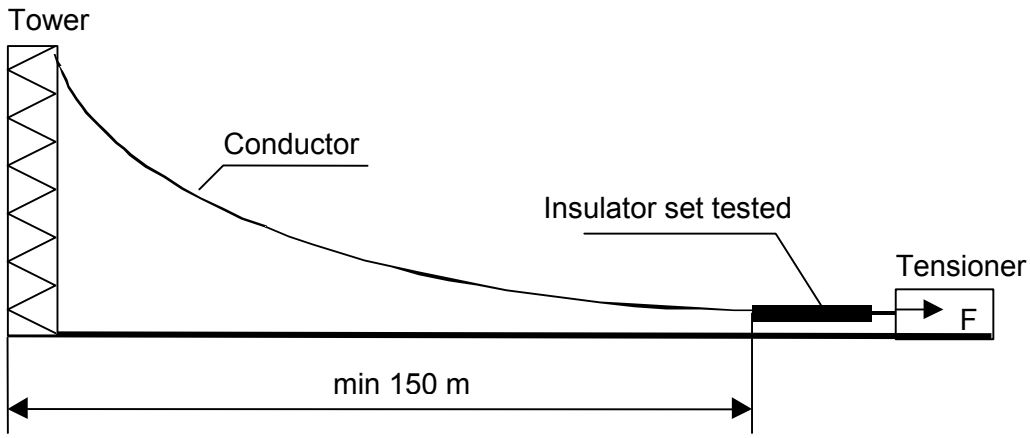

Figure 10.11.1/CZ.1 – Example of dynamic test arrangement

The force is applied to an insulator set, which corresponds to 80 % of the maximum conductor tension, determined according to 4.2.7/CZ.7 (unless the Project Specification specifies a higher value of initial test force) and then one string is suddenly interrupted. Tests are carried out on two completely furnished insulator sets and two tests are carried out on each of them. The test is passed, if no remaining insulator strings fail during any of four tests.

Furthermore, it is recommended

- to record the time path of specific elongations in various points of insulators in the string (their maximum values and corresponding stresses) during the dynamic tests;
- to carry out the mechanical static test of the same type of insulator unit by combined tensile and bending load where the values of specific elongations (and corresponding stresses) are being measured;
- to assess, on the basis of comparison of the maximum values, measured during dynamic tests, with the maximum values, measured during static test, what is the safety margin of an insulator set under dynamic stress.

When testing the insulator by combined tensile and bending load, the static tensile force is applied to the tested insulator, the value of which is the same as used during the dynamic test. Then the force, acting in direction perpendicular to the insulator axis, shall be applied to the middle of insulator unit, which is gradually increased until failure of the insulator. The values of specific elongations (and corresponding stresses) shall be measured in the same points of insulator unit as during the dynamic test.

10.11.2 Optional type tests

(ncpt) **CZ.1** In the sense of 10.11.1/CZ.2, radio interference tests and power arc tests are considered as standard ones.

Clause National regulation

11 Line equipment – Overhead line fittings

11.1 General

(ncpt) **CZ.1** Double and multiple insulator sets, composed of parallel insulator strings of the long rod porcelain insulators, are about to be designed so that no insulator in remaining strings is broken by impacts of insulators or fittings of the ruptured string when moving after failure of a string.

11.3 RIV requirements and corona extinction voltage

(ncpt) **CZ.1** Insulator set fittings, protective fittings and conductor accessories shall not produce the radio noise exceeding permissible levels of radio interference voltages specified in Table 10.3/CZ.1.

11.5 Short-circuit current and power arc requirements

(ncpt) **CZ.1 Insulator set fittings**

The insulator set fittings of circuits with a rated voltage of 110 kV and higher ones shall withstand, in a power arc test, short-circuit current load according to Table 10.5/CZ.1. Under this short-circuit load, they shall not reach a temperature which should lead to an inadmissible reduction of their mechanical strength.

If coupling fittings are used in insulator sets for circuits with a rated voltage of 110 kV and higher ones, which have not been tested in conjunction with power arc tests of insulator sets, the short-circuit resistance of these fitting shall be judged by values of the nominal short-time current and of the nominal short-circuit time according to EN 60865-1, declared by the manufacturer of these fittings. The nominal short-time current is usually specified for the nominal short-circuit time of 1 second. Unless otherwise specified in the Project Specification, the value of the nominal short-time current of coupling fittings for the nominal short-circuit time of 1 second shall not be lower than the value given in Table 10.5/CZ.1.

This requirement applies also to any other fittings loaded by short-circuit current (such as suspension and tension clamps, fittings for other conductor attachments, fittings to attach insulator sets to supports, earth wire fittings).

NOTE Power arc tests on protective fittings shall be always carried out.

11.6 Mechanical requirements

(ncpt) **CZ.1 Partial factors for a material property for fittings**

CZ.1.1 Ultimate limit states

The verification at the ultimate limit states shall be performed using a value of the partial factor for a material property γ_{M1} equal to 1,6, unless a higher value is required by the Project Specification. Here, the design loads acting on fittings are considered, resulting from conductors and insulator sets in the load cases, specified in 4.2.10.2/CZ.1 and 4.2.10.2/CZ.2, in conjunction with the partial factors for actions according to 4.2.11/CZ.1.

The requirement for the mechanical resistance of fittings in case of one-sided release of conductor tension (security load – load case 5a) does not apply to line post insulators, where requirements shall be specified in the Project Specification.

CZ.1.2 Serviceability limit states

The verification at the serviceability limit states shall be performed using a value of the partial factor for a material property γ_{M2} equal to 1,9, unless a higher value is required by the Project Specification. Here, the design loads, resulting from the load cases 1a, 1b and 2a according to Table 4.2.11/CZ.2, are considered.

NOTE The partial factors for materials γ_M, listed in 11.6/CZ.1.1, 11.6/CZ.1.2 and in 11.6/CZ.2 below, relate to the specified minimum failing loads (SMFL) of insulator set fittings, suspension and tension clamps and conductor mid-span tension joints according to EN 61284.

Clause National regulation

(ncpt) **CZ.2 Fittings of multiple insulator sets**

In case of failing of one string of an insulator set, composed of two or more insulator strings, it shall be verified that the effects of design actions do not exceed the design resistance of remaining loaded fittings. Here, it is considered that the maximum static forces, determined according to 4.2.7/CZ.7, act on fittings in the remaining strings. The partial factor for a material property is taken as γ_{M3} = 1,1, unless a higher value is required in the Project Specification.

(ncpt) **CZ.3 Tension clamps, dead-end tension joints and mid-span tension joints**

The specified minimum failing load of tension clamps, dead-end tension joints and mid-span tension joints according to EN 61284 is given by

$$\mathrm{SMFL} = X \cdot 0{,}95 \cdot \mathrm{RTS}$$

where

SMFL is the specified minimum failing load which refers to the grip of the clamp/joint on the conductor;

RTS is the conductor rated tensile strength;

X is the factor, equal to 0,9, unless otherwise stated in the Project Specification.

Tensile tests shall be carried out according to EN 61284. More detailed requirements can be stated in the Project Specification. If not otherwise stated, a time period, for which the load shall be maintained to the value of 0,6·SMFL, shall not be shorter than 10 minute and the subsequent load growth rate shall not be more rapid than 0,15·SMFL/60 second.

In isolated cases (e.g. in spans with reduced conductor tension) and with the customer′s approval the clamps with lower specified minimum failing load can be used, however, requirements given in 11.6/CZ.1 shall be satisfied.

(ncpt) **CZ.4 Additional requirements for suspension clamps**

If not otherwise stated in the Project Specification, the specified minimum slipping load of standard clamps according to EN 61284 shall not be lower than the conductor tension difference and the one-sided conductor tension, respectively, resulting from the load case 2c, 5a and 5b according to Table 4.2.11/CZ.1. This requirement does not apply to controlled slippage clamps which are designed to enable the conductor to slip, where appropriate requirements shall be stated in the Project Specification.

The requirement for a value of the specified minimum slipping load for one-sided conductor tension release (security load – load case 5a) does not apply to suspension clamps of rigid line post insulators where appropriate requirements shall be stated in the Project Specification.

The value of the outlet angle of a conductor from a suspension clamp shall not be greater than the maximum permissible value specified by the manufacturer of the clamp. This requirement shall be fulfilled under maximum design conductor temperature and under conditions resulting from the load cases 1b and 2a according to Table 4.2.11/CZ.2.

12 Quality assurance, checks and taking-over

12.1 Quality assurance

(ncpt) **CZ.1** Subclause 12.1 EN 50341-1 has the status of recommendation in the Czech Republic. The relevant requirements shall be stated in the Project Specification, if required.

Clause National regulation

Annex G (normative)

Earthing systems

G.2 Minimum dimensions of earth electrode materials ensuring mechanical strength and corrosion resistance

(ncpt) **CZ.1 Minimum dimensions of earth electrode materials**
The minimum dimensions of earth electrode materials ensuring mechanical strength and corrosion resistance are specified in Table G.1.

NOTE The minimum dimensions of earth electrode materials specified in ČSN 33 2000-5-54 apply only to equipment up to 1000 V.

G.6 Reduction factor related to earthwires of overhead lines

(ncpt) **CZ.1 Values of reduction factors related to earthwires of overhead lines**
Values of reduction factors of earth wires of the mostly used types of lines with rated voltages of 110 kV, 220 kV and 400 kV are given in ČSN 33 2160. In the case of types and/or a number of earth wires and/or support configurations, which are not included in ČSN 33 2160, the appropriate value of a reduction factor shall be determined by calculation.

Annex H (informative)

Earthing systems

H.2 Basis for verification

H.2.2 Resistance to earth

(ncpt) **CZ.1 Calculation of resistance to earth**
Equations for calculation of the resistance of radial strip earth electrodes and earth rods are given in H.2. If more of individual earth electrodes of the same type and/or the combination of several types of earth electrodes are to be used, the efficiency of utilisation of earth electrodes needs be considered (the efficiency factor η). When determining the resistance to earth of a support, it is possible to take a combination of resistance to earth of a support foundation and of purpose-made earth electrodes into account.

NOTE Equations specified in Annex NL ČSN 33 2000-5-54 apply only to equipment up to 1000 V.

H.3 Installation of earth electrodes and earthing conductors

H.3.1 Installation of earth electrodes

H.3.1.3 Jointing the earth electrodes

(ncpt) **CZ.1 Location of copper and steel earth electrodes**
Copper earth electrodes may not be placed in a clearance of less than 2 m from steel earth electrodes and may not be connected to them either.

H.3.2 Installation of earthing conductors

(ncpt) **CZ.1 Corrosion protection of earthing conductors**
Earthing conductors made of steel without any protection sheaths shall be protected around the point, where they enter the soil in a minimum length of 30 cm above the ground level and 20 cm under the ground level, by passive corrosion protection (for example by hot-dip galvanising, asphalt sealing, casting resin, etc.).

Clause National regulation

Annex M (informative)

Typical values of the geotechnical parameters of soils and rocks

M.1 General

(ncpt) **CZ.1 Design values of the geotechnical parameters of soils and rocks**
Following tables are added:

M/CZ.3 for design values of the geotechnical parameters of fine-grain soils;

M/CZ.4 for design values of the geotechnical parameters of sandy soils;

M/CZ.5 for design values of the geotechnical parameters of gravelly soils;

M/CZ.6 for design values of the geotechnical parameters of rocks in rock massive.

M.2 Definitions

(ncpt) **CZ.1 Classification of soils and classification of grains and components**
For the purpose of the application of Tables M/CZ.3, M/CZ.4, M/CZ.5, classification of grains and components according to grain sizes and symbols used are given in Table M/CZ.1 and a basic classification of soils is included in Table M/CZ.2.

M.3 Units

(ncpt) **CZ.1 Symbols and units**
Symbols and units specified in M.3 are completed with symbols used in Tables M/CZ.1 and M/CZ.2.

Definitions of other symbols specified in Tables M/CZ.3, M/CZ.4, M/CZ.5 and M/CZ.6 are shown below respective tables.

Clause National regulation

Table M/CZ.1 - Classification of grains and components according to the size

Classification		Symbol	Size of grains (mm)
grains	components		
very coarse	boulders	b	> 200
	pebbles, cobbles	cb	200 - 60
coarse	gravelly	g	60 - 2
	sandy	s	2 - 0,06
fine	silty	m	0,06 - 0,002
	clayey	c	< 0,002

f

Table M/CZ.2 - Basic classification of soils

Soils	Term of soil	Symbol	Contents of components	
			f	s : g
gravelly	gravel	G	< 35%	g > s
sandy	sand	S	< 35%	g < s
fine-grained	fine grained soil after specification	F	> 35%	-
	loam	M		
	clay	C		

Table M/CZ.3 - Design values of characteristics of fine-grained soils

Soil	Class	Symbol	Consistency	γ (kNm^{-3})	E_{def} (MPa)	c_u (kPa)	ϕ_u (°)	c_{ef} (kPa)	ϕ_{ef} (°)	R_{dt} (kPa)
gravelly loam	F1	MG	soft	19.0	5 - 10	40	0	4 - 12	26 až 32	110
			semi-stiff	19.0	10 - 20	70	0	4 -ž 12		200
			stiff S_r > 0,8	19.0	12 - 21	70	10	8 - 16		300
			stiff S_r < 0,8	19.0	15 - 30	70 až 80	12 - 15	12 - 16		300
			solid Sr > 0,8	18.0	verified by tests	verified by tests	verified by tests	16 - 24		500
			solid Sr < 0,8	18.0				verified by tests		500
gravelly clay	F2	CG	soft	19.5	4 - 8	30	0	6 - 14	24 až 30	100
			semi-stiff	19.5	7 - 15	60	0	6 - 14		175
			stiff S_r > 0,8	19.5	10 - 12	60	10	10 -ž 18		275
			stiff S_r < 0,8	19.5	18 - 25	60 - 70	12 - 15	18 - 36		275
			solid Sr > 0,8	18.0	verified by tests	verified by tests	verified by tests	18 - 26		450
			solid Sr < 0,8	18.0				verified by tests		450
sandy loam	F3	MS	soft	18.0	3 - 6	30	0	8 - 16	24 až 29	100
			semi-stiff	18.0	5 - 8	60	0	8 - 16		175
			stiff S_r > 0,8	18.0	8 - 12	60	10	12 - 20		275
			stiff S_r < 0,8	18.0	12 - 15	60 - 70	12 - 15	20 - 40		275
			solid Sr > 0,8	18.0	verified by tests	verified by tests	verified by tests	20 - 28		450
			solid Sr < 0,8	18.0				verified by tests		450
sandy clay	F4	CS	soft	18.5	2,5 - 4	30	0	10 - 18	22 až 27	80
			semi-stiff	18.5	4 - 6	50	0	10 - 18		150
			stiff S_r > 0,8	18.5	5 - 8	70	5	14 - 22		250
			stiff S_r < 0,8	18.5	8 - 12	70 - 80	8 - 14	22 - 44		250
			solid Sr > 0,8	18.0	verified by tests	verified by tests	verified by tests	22 - 30		400
			solid Sr < 0,8	18.0				verified by tests		400

Table M/CZ.3 - Design values of characteristics of fine-grained soils (concluded)

Soil	Class	Symbol	Consistency	γ (kNm^{-3})	E_{def} (MPa)	c_u (kPa)	ϕ_u (°)	c_{ef} (kPa)	ϕ_{ef} (°)	R_{dt} (kPa)
low plasticity loam medium plasticity loam	F5	ML MI	soft	20	1,5 - 3	30	0	8 - 16	19 - 23	70
			semi-stiff	20	3 - 5	60	0	8 - 16		150
			stiff S_r > 0,8	20	5 - 8	70	5	12 - 20		250
			stiff S_r < 0,8	20	7 - 10	70 - 80	8 - 14	20 - 40		250
			solid Sr > 0,8	18	10 - 15	200	0	20 - 28		400
			solid Sr < 0,8	18	12 - 20	80 - 90	15 - 20	verified by tests		400
low plasticity clay medium plasticity clay	F6	CL CI	soft	21	1,5 - 3	25	0	8 - 16	17 - 21	50
			semi-stiff	21	3 - 6	50	0	8 - 16		100
			stiff S_r > 0,8	21	6 - 8	80	0	12 - 20		200
			stiff S_r < 0,8	21	8 - 12	80 - 90	4 až 12	20 - 40		200
			solid Sr > 0,8	18	10 - 15	170	0	20 - 28		350
			solid Sr < 0,8	18	12 - 20	80 - 90	14 - 18	verified by tests		350
high, very high and extremely high plasticity loam	F7	MH MV ME	soft	21	1 - 3	25	0	4 - 10	15 - 19	50
			semi-stiff	21	3 - 5	50	0	4 - 10		100
			stiff S_r > 0,8	21	5 - 7	80	0	8 - 16		200
			stiff S_r < 0,8	21	7 - 10	80 - 90	4 - 12	14 - 28		200
			solid Sr > 0,8	18	10 - 15	170	0	16 - 24		350
			solid Sr < 0,8	18	12 - 20	80 - 90	14 - 18	verified by tests		350
high, very high and extremely high plasticity clay	F8	CH CV CE	soft	20.5	1 - 2	20	0	4 - 10	13 - 17	40
			semi-stiff	20.5	2 - 4	40	0	4 - 10		80
			stiff S_r > 0,8	20.5	4 - 6	80	0	8 - 16		160
			stiff S_r < 0,8	20.5	6 - 8	80 - 90	3 - 10	14 - 28		160
			solid Sr > 0,8	18	8 - 10	150	0	16 - 24		300
			solid Sr < 0,8	18	10 - 15	80 - 90	12 - 16	verified by tests		300

γ - soil volume weight (kNm^{-3})

E_{def} - static Young's modulus (modulus of deformation) of foundation soil

c (c_{ef}/c_u) - cohesion of soil (effective/total) (kPa)

S_r - degree of saturation (1)

ϕ (ϕ_{ef}/ϕ_u) – internal angle friction of soil (effective/total) (°)

R_{dt} - design load-bearing capacity of fine grained soils for width of foundation up to 3 m and foundation depth ranging from 0,8 to 1,5 m (kPa)

Table M/CZ.4 Design values of characteristics of sandy soils

Soil	Class	Symbol	Qualitative characteristics	γ (kNm^{-3})	E_{def} (Mpa)		ϕ_{ef} (°)		c_{ef} (kPa)	R_{dt} (kPa) foundation width b (m)			
					I_D = 0,33 - 0,67	I_D = 0,67 - 1,0	I_D = 0,33 - 0,67	I_D = 0,67 - 1,0		0.5	1.0	3.0	6.0
well grained sand	S1	SW	f < 5%(g+s+f) ∧ C_u > 6 ∧ C_c = 1 - 3	20.0	30 - 60	50 - 100	34 - 39	37 - 42	0	300	500	800	600
badly grained sand	S2	SP	f<5%(g+s+f) ∧ non SW	18.5	15 - 35	30 - 50	32 - 35	34 - 37	0	250	350	600	500
sand with fine soil addition	S3	SF	f = 5 - 15%(g+s+f)	17.5	12 - 19	17 - 25	28 - 31	30 - 33	0	225	275	400	325
loamy sand	S4	SM	f =15 - 35%(g+s+f)	18.0	5 - 15		28 - 30		0 - 10	175	225	300	250
clayey sand	S5	SC	f = 15 - 35%(g+s+f)	18.5	4 - 12		26 - 28		4 - 12	125	175	225	175

C_u - uniformity coefficient(grain-heterogeneity number)

C_c - curvature number

γ - soil volume weight (kNm^{-3})

E_{def} - static Young's modulus (modulus of deformation) of foundation soil (Mpa)

ϕ_{ef} – internal friction effective angle of soil (°)

c_{ef} - effective soil cohesion (kPa)

I_D - relative compactness (specific gravity)

R_{dt} - design load-bearing capacity of sandy soils for foundation depth 1 m. For classes S1 - S3 values are valid for compact soils. For medium compact soils values are multiplied by factor 0,65. For classes S4 and S5 values are valid for semi-stiff or stiff consistency of fine-grained particles.

Table M/CZ.5 Design values of characteristics gravelly soils

Soil	Class	Symbol	Qualittive characteristics	γ (kNm^{-3})	E_{def} (Mpa)		ϕ_{ef} (°)		c_{ef} (kPa)	R_{dt} (kPa) foundation width b (m)			
					I_D = 0,33 - 0,67	I_D = 0,67 - 1,0	I_D = 0,33 - 0,67	I_D = 0,67 - 1,0		0.5	1.0	3.0	6.0
well granied gravel	G1	GW	f < 5%(g+s+f) /\ C_u > 4 /\ C_c = 1 - 3	21.0	250 - 390	360 - 500	36 - 41	39 - 44	0	500	800	1000	800
badly grained gravel	G2	GP	f<5%(g+s+f) /\ non GW	20.0	100 - 190	170 - 250	33 - 38	34 - 41	0	400	650	850	650
gravel with fine grained soil addtion	G3	GF	f = 5 - 15%(g+s+f)	19.0	80 - 90	90 - 100	30 - 35	33 - 38	0	300	450	700	500
loamy gravel	G4	GM	f =15 - 35%(g+s+f)	19.0	60 - 80		30 - 35		0 - 8	250	300	400	300
clayey gravel	G5	GC	f = 15 - 35%(g+s+f)	19.5	40 - 60		28 - 32		2 - 10	150	200	250	200

C_u - uniformity coefficient(grain-heterogeneity number)

C_c - curvature number

γ - soil volume weight (kNm^{-3})

E_{def} - static Young's modulus (modulus of deformation) of foundation soil (Mpa)

ϕ_{ef} – internal friction effective angle of soil (°)

c_{ef} - effective soil cohesion (kPa)

I_D - relative compactness (specific gravity)

R_{dt} - design load-bearing capacity of gravelly soils for foundation depth 1 m. For classes G1 - G3 values are valid for compact soils. For medium compact soils values are multiplied by factor 0,65. For classes G4 and G5 values are valid for semi-stiff or stiff consistency of fine-grained particles.

Clause National regulation

Table M/CZ.6 - Design values of characteristics of solid rocks

Type of rock (examples)	Class	Strength δ_c (MPa)	Strength	Characteristics	γ (kNm^{-3})	R_{dt} (MPa) medium density of discontinuities distance of discontinuities (mm)		
						very low - - low > 600	medium - - high 600 - 60	very high - - extremly high < 60
Unweathered, compact: granitoides, diorite, gabbro, migmatite, granulite, quartzite, amphibolite, basalt, quartz paragneiss, orthogneiss, cristalline limestone	R1	150	very high	rock can be hardly chipped away by prospecting hammer	from 19 to 30	6	4	2
Unweathered, compact: limestone, dolomite, conglomerate, sandstone, greywacke, compact siltstone, paragneiss, mica schist, phylite. Very slighly weathered - unweathered rocks of class R1	R2	50 - 150	high	rock can be hardly broken by prospecting hammer		2	1	0.6
Unweathered, compact: claystone, marl, tuff. Very slighly weathered - unweathered rocks of class R2, very slighly weathered rocks of class R1	R3	15 - 50	medium	rock can be easily broken by prospecting hammer		0.6	0.5	0.4
Unweathered, compact: Slighly consolidated sandstone, siltstone, claystone, chloritic and graphitic schist, phylonite, ultramylonite. Strongly weathered rocks of class R1 and R2, slighly weathered rocks of class R3.	R4	5 - 15	low	rock can be scratched with knife, not by fingernail		0.6	0.5	0.4
Unweathered, compact: Very slighly consolidated sandstone, siltstone, claystone, tuffite, fault clay. All weathered rocks of class R1 and R2, strongly weathered rocks of class R3, slighly weathered rocks of class R4.	R5	1,5 - 5	very low	rock can be fractured by hand		0.4	0.5	0.3
All weathered rocks of class R1 - R5, eluvial soils	R6	0,5 - 1,5	extremly low	rock can be scratched by fingernail		0.3	0.2	0.15

δ_c - rock strength under simple pressure (Mpa)

γ – soil volume weight (kNm-3)

R_{dt} - design bearing capacity (Mpa)

Table values R_{dt} in R1 - R4 classes are applicable for rock massif with closed discontinuities without any clayey infilling. In the opposite case an individual procedure is required.

Provided the solid rocks of R5 and R6 classes are possible to evalute by means of soil mechanics methods, table values of R_{dt} capacity valid for soils according to respective classification can be applied.